IES MASTER

Institute for Engineers (IES/GATE/PSUs)

ESE 2022 Prelims Exam

Paper - II

CIVIL ENGINEERING

Detailed Solution

(SET-D)

Office Address

DELHI: F-126, Katwaria Sarai, New Delhi - 110 016

Ph: 011-41013406, Mobile: 8130909220, 9711853908

Web: www.iesmaster.org | E-mail: info@iesmaster.org

1. The thickness design of pavement mainly depends on

(a) the pavement materials

(b) the climatic factors

(c) the design wheel load

(d) the subgrade soil

Sol: (c)

The thickness design of pavement mainly depends upon the design wheel load.

2. For traffic surveys using origin and destination studies, the most suitable method in case of heavy traffic and absence of skilled or trained personnel is

(a) Road side interview method

(b) License plate method

(c) Work spot or home interview method

(d) Return post card method

Sol: (d)

Road side interview method :

- In this method data is collected quickly in short duration
- Skilled team is required which can be trained quickly
- Main drawback of this method is that vehicles are stopped for interview. It causes delay in vehicular movement.
- It may cause congestion unless there is enough space.

License Plate Method :

- It is quite easy as far as field work is concerned.
- The field organization can be trained quickly
- It involves a lot of office work in tracing trips of through various stations.
- It is advantageous when the area under consideration is small like a large intersection or small business centre.

Return Post Card Method :

- It is suitable when traffic is heavy.
- It does not require skilled personnel.
- It may not give true picture.

Tag on car method :

- It is useful where the traffic is heavy and moves continuously.
- It gives only information about entry, exit and time taken.

3. In traffic control, the speed at which vehicles are presumed to travel through the coordinated signal system is known as

(a) Signal coordination

(b) Speed of progression

(c) Cycle

(d) Through band

Sol: (b)

Speed of Progression : The speed at which vehicles are presumed to travel through the coordinated signal system is known as speed of progression.

Through Band : It is space time path incresecting the green at all signal is called through band.

Band Width : It is time difference between the beginning and end of the through band at any point.

Offset : It is the time difference between the beginning of the greens at any two signals is known as the offset of the cycle at one intersection relative to that at the other.

4. The pressure outside the droplet of water of diameter of 0.04 mm is 10.32 N/cm^2 (atmospheric pressure). What is the pressure within the droplet if surface tension is 0.0725 N/m of water ?

(a) 11.045 N/cm^2 (b) 10.32 N/cm^2

(c) 9.45 N/cm^2 (d) 8.595 N/cm^2

Sol: (a)

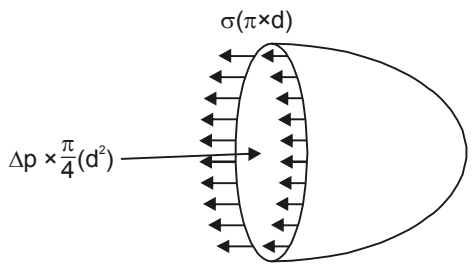

$$\Delta p \times \frac{\pi}{4} d^2 = \sigma \times \pi d$$

where,

Δp = ($p_{inside} - p_{outside}$)

= pressure difference between inside and outside of water bubble,

d = diameter of the bubble

= 0.04 mm

σ = surface tension

= 0.0725 N/m (given)

p_{inside} = 10.32 N/cm^2 (given)

$$\Rightarrow \quad \Delta p = \left(\frac{4\sigma}{d}\right) = \left(\frac{4 \times 0.0725}{\left(\frac{0.04}{10}\right) \times 100}\right)$$

= 0.725 N/cm^2

$\Rightarrow p_{inside} - p_{outside} = 0.725$

$\Rightarrow p_{inside}$ = (10.32 + 0.725) = 11.045 N/cm^2

5. What is the viscosity of a liquid whose kinematic viscosity is 6 stokes and specific gravity is 1.90?

(a) 1.14 poise (b) 11.40 poise

(c) 0.114 Ns/m^2 (d) 11.40 Ns/m^2

Sol: **(b)**

Given, kinematic viscosity (ν) = 6 stokes

Specific gravity (G) = 1.9

Kinematic viscosity (ν)

$$= \frac{\text{dynamic viscosity } (\mu)}{\text{density } (\rho)}$$

$$\Rightarrow \quad \sigma = \frac{\mu}{1.9 \times 1 \text{ gm/cc}}$$

$\Rightarrow \mu$ = (1.9 × 6) poise = 11.40 poise

Note: 1 stokes = 1 cm^2/sec

$$1 \text{ poise} = \frac{1 \text{ gm}}{\text{cm} - \text{sec}}$$

$$10 \text{ poise} = 1 \frac{\text{Ns}}{\text{m}^2}$$

6. A 2 m wide tank contains water upto a height of 0.50 m above its base. An immiscible liquid of specific gravity 0.80 is filled on the top of the water upto 1 m height. What is the total pressure force on one side of the tank ? (Take density of water as 1000 kg/m^3 and g = 9.81 m/s^2)

(a) 7.85 kN (b) 24.52 kN

(c) 10.3 kN (d) 18.15 kN

Sol: **(d)**

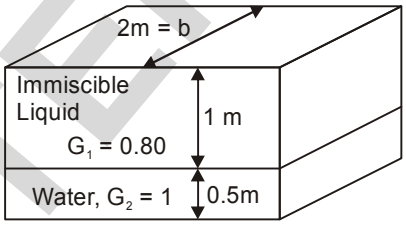

Pressure prism on one side of the tank:

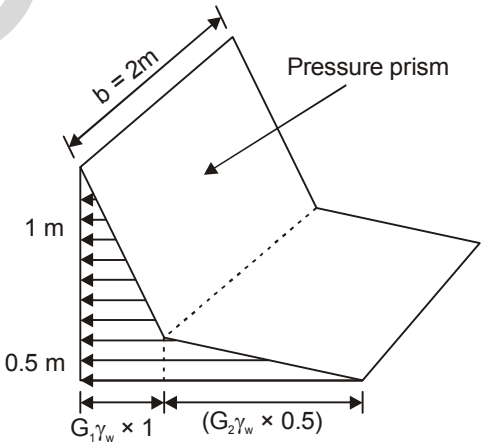

Net force on side of plate = volume of pressure prism

$$= b \times \left[\frac{1}{2} \times 1 \times G_1\gamma_w \times 1 + \frac{1}{2} \times 0.5 \times (G_1\gamma_w \times 1 + G_1\gamma_w \times 1 + G_2\gamma_w \times 0.5)\right]$$

$$= 2 \times \frac{1}{2}\left[0.8 \times 9.81 + 0.5 \times (2 \times 9.81 \times 0.8 + 1 \times 0.5 \times 9.81)\right]$$

= 18.1485 kN

7. A pipeline of uniformly varying cross section carries an oil of specific gravity 0.87. The diameter of pipe is 200 mm at end A and 500 mm at end B. The end B is located at 4 m higher than A. What is the loss of head in the

pipeline if the pressure reading at A is 9.81 N/cm^2 and at B is 5.886 N/cm^2? (Take discharge is 200 litres/s and g = 9.81 m/s^2)

(a) 2.609 m (b) 26.09 cm

(c) 2.109 m (d) 21.09 cm

Sol: (a)

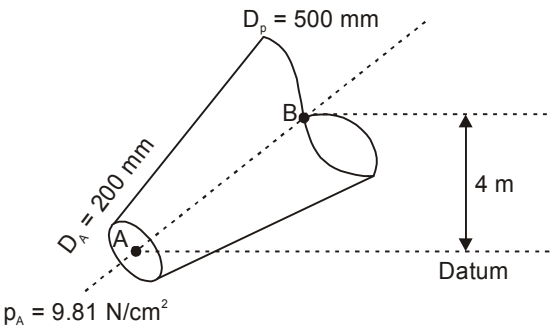

Discharge, Q= 200 lt/sec = 0.2 m/sec

$$\gamma_{oil} = (S.G \times \gamma_w) = (0.87 \times 9.81)$$
$$= 8.5347 \text{ kN/m}^3$$

At end A:

$$Z_A = 0 \text{ (datum)}$$
$$P_A = 9.81 \text{ N/cm}^2 = 98.10 \text{ kN/m}^2$$

$$V_A = \left(\frac{Q}{(Area)_A}\right) = \left(\frac{0.2}{\frac{\pi}{4} \times (0.2)^2}\right)$$
$$= 6.366 \text{ m/sec}$$

$$\therefore \text{ Total energy } (E_A) = \frac{P_A}{\gamma_{oil}} + Z_A + \frac{V_A^2}{2g}$$
$$= \left[\frac{98.1}{8.5347} + 0 + \frac{(6.366)^2}{2 \times 9.81}\right]$$
$$= 13.559 \text{ m}$$

At end B:

$$Z_B = 4 \text{ m}$$
$$P_B = 5.886 \text{ N/cm}^2 = 58.86 \text{ N/m}^2$$

$$V_B = \left(\frac{Q}{(Area)_B}\right) = \left[\frac{0.2}{\frac{\pi}{4} \times (0.5)^2}\right]$$
$$= 1.018 \text{ m/sec}$$

$$\therefore \text{ Total energy at B } (E_B) = \frac{P_B}{\gamma_{oil}} + Z_B + \frac{V_B^2}{2g}$$
$$= \left[\frac{58.86}{8.5347} + 4 + \frac{(1.018)^2}{2 \times 9.81}\right]$$
$$= 10.949 \text{ m}$$

As $E_A > E_B$, thus direction of flow is from A to B.

Loss of head in pipeline (h_L)

$$= (E_A - E_B)$$
$$= (13.559 - 10.949) = 2.61 \text{ m}$$

8. Air at standard conditions flows over a flat plate. The free stream speed is 3 m/s. What is the thickness of boundary layer at a distance of 1 m from the leading edge of the flat plate ? (Take the kinematic viscosity of air is 1.5 × 10^{-5} m^2/s and density is 1.23 kg/m^3)

(a) 1.80 mm (b) 1.80 cm

(c) 10.3 cm (d) 10.3 mm

Sol: (*)

Given velocity of air (v) = 3 m/sec

Kinematic viscosity (ν) = 1.5 × 10^{-5} m^2/sec,

density (ρ) = 1.23 kg/m^3

using x = L= 1m

$$\text{Reynolds number } (Re_L) = \left(\frac{VL}{\nu}\right)$$
$$= \left(\frac{3 \times 1}{1.5 \times 10^{-5}}\right)$$
$$= 2 \times 10^5 < 5 \times 10^5$$

Thus, throughout 1m length, laminar boundary layer exists.

$$\text{So, } \frac{\delta}{L} = \frac{5}{\sqrt{Re_L}}$$

$$\Rightarrow \delta = \frac{1 \times 5}{\sqrt{2 \times 10^5}} = 0.01118\text{m}$$
$$= 11.18 \text{ mm}$$

9. The water is flowing with a velocity of 1.5 m/s in a pipe of length 2500 m and diameter 500 mm. A valve is provided at the end of the pipe. What is the

rise in pressure if the valve is closed in 25 seconds ? (Take velocity of pressure wave is 1460 m/s)

(a) 15 N/cm^2 (b) 1500 N/cm^2

(c) 150 N/cm^2 (d) 15 kN/cm^2

Sol: (a)

Given, V = 1.5 m/sec, L = 2500 m

Diameter of pipe (D) = 500 m

Time of closer (T) = 25 sec

Velocity of pressure wave (C) = 1460 m/sec

$$\text{Critical time } (T_0) = \left(\frac{2L}{C}\right) = \left(\frac{2\times 2500}{1460}\right)$$

$$= 3.42 \text{ sec}$$

$$\text{Here, } \left(\frac{T}{T_0}\right) = \left(\frac{25}{3.42}\right) > 1.5$$

It is a case of very slow closure of valve, thus the compressibility effects are no longer important and pressure rise is due to change in momentum is given by

$$p_{vsc} = \left(\frac{\rho LV}{T}\right) = \left(\frac{1000\times 2500\times 1.5}{25}\right)$$

$$= 15 \times 10^4 \text{ N/m}^2 = 15 \text{ N/cm}^2$$

10. The depth of flow of a channel section at which the specific energy is minimum, is called

(a) Critical velocity (b) Critical depth

(c) Critical energy (d) Subcritical flow

Sol: (b)

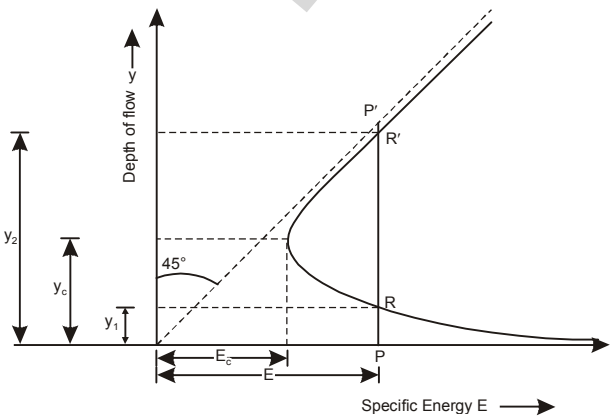

- The depth of flow at which specific energy is minimum is called critical depth and velocity of flow is called critical velocity.
- The specific energy is minimum for a particular discharge at critical stage of flow.
- When depth of flow is greater than critical depth, the velocity of flow would be smaller than critical velocity for given constant discharge the flow is called subcritical.
- When depth of flow is less than critical depth, the velocity of flow would be more than critical velocity for given constant discharge, the flow is called supercritical.

Flow condition	Depth of flow	Froude Number $F_r = \frac{v}{\sqrt{gy}}$
Subcritical	$y > y_c$	$F_r < 1$
Critical	$y = y_c$	$F_r = 1$
Super critical	$y < y_c$	$F_r > 1$

11. Which one of the following statements is correct with respect to Kaplan Turbine ?

(a) The peripheral velocity at inlet is more than peripheral velocity at outlet.

(b) Velocity of flow at inlet is more than velocity of flow at outlet.

(c) The peripheral velocity at inlet and outlet are equal.

(d) Velocity of flow at outlet is more than velocity of flow at inlet.

Sol: (c)

In Kaplan turbine; water enters and leaves the runner at the same diameter;

$$D_1 = D_2$$

hence, $u_1 = u_2$

i.e. peripheral velocity (of runner) at inlet and outlet are equal.

12. The speed of the generator can be maintained constant only if the speed of the turbine runner is constant equal to the one given by equation $N = \frac{60f}{p}$ and it is known as

(a) Synchronous speed

(b) Asynchronous speed

(c) Derived speed

(d) Measured variable speed

Sol: **(a)**

$$N = \frac{60 \times f}{P}$$

N is synchronous speed.

13. Consider the following statements related to negative slip of the reciprocating pump :

1. The actual discharge of a reciprocating pump is more than the theoretical discharge.
2. The co-efficient of discharge will be more than unity.
3. When the suction pipe is short and delivery pipe is long and pump is running at slow speed, then negative slip of the pump occurs.

Which of the above statements are correct?

(a) 1 and 2 only (b) 1 and 3 only

(c) 2 and 3 only (d) 1, 2 and 3

Sol: **(a)**

Slip = $Q_{th} - Q_{act}$

When $Q_{act} > Q_{th}$

Slip is negative slip.

Coefficient of discharge;

$$C_d = \frac{Q_{act}}{Q_{th}} > 1$$

Negative slip is observed when suction pipe is long; delivery pipe is short and pump runs at high speeds.

14. A single acting reciprocating pump has a plunger of diameter 250 mm and stroke of 350 mm. If the speed of the pump is 60 rpm and it delivers 16.5 lit/sec of water against a suction head of 5 m and a delivery head of 20 m, what is the co-efficient of discharge?

(a) 0.72 (b) 0.79

(c) 0.86 (d) 0.96

Sol: **(d)**

Single acting reciprocating pump

D = 250 mm

L = 350 mm

N = 60 rpm

$$Q_{th} = \frac{ALN}{60}$$

$$= \frac{\frac{\pi}{4}(0.25)^2 \times 0.35 \times 60}{60} \times 1000$$

= 17.17 litre/sec

Q_{actual} = 16.5 litre/sec

Coefficient of discharge;

$$C_d = \frac{Q_{act}}{Q_{th}} = \frac{16.5}{17.17} = 0.96$$

15. The stream function is given by the expression $\psi = 2x^2 - y^2$. What is the resultant velocity at a point denoted by x = 2 and y = 3 ?

(a) 10 (b) 12

(c) 15 (d) 18

Sol: **(a)**

Given, stream function, $\psi = 2x^2 - y^2$

As per Cauchy Reimann equation,

$$u = -\frac{\partial \psi}{\partial y} = -(-2y) = 2y$$

$$V = \frac{\partial \psi}{\partial x} = 4x$$

At (2, 3), u = 6 units

V = 8 units

$$\therefore \text{Velocity (V)} = \sqrt{(u)^2 + (V)^2}$$

$$= \sqrt{(6)^2 + (8)^2} = 10 \text{ units}$$

16. Which one of the following is the source of error in curve computations and layout ?

(a) Ability to set on the plates of the theodolite, the required sub-division of a minute for the deflection angles.

(b) Use of less than full tape-lengths on arc-definition curves.

(c) Carrying out computed elevations to more than 10 mm.

(d) Good intersections between tape line and site line on flat curves.

Sol: (b)

Some of the sources of error in curve computations and layout are :

1. Inability to set on the plates of the theodolite, the required subdivision of a minute for the deflections angles.
2. Poor intersections between tape line and sight line on flat curves.
3. Use of less than full tape-length on arc-definition curves.
4. The large numbers which must be used to obtain answers with six significant figures.
5. Carrying out grade percentages beyond 0.01%. Multiple of 0.05% or 0.10% are desirable for highways.
6. Carrying out computed elevations to less than 3 mm.
7. Selecting the vertex at other than a full station in a vertical curve.

17. Photographic surveying is suitable for

(a) small-scale mapping of open hilly or mountainous countries
(b) flat or wooded country
(c) roads
(d) transmission lines

Sol: (a)

Photographic surveying is suitable for small scale mapping of open hilly or mountainous countries.

18. What is the difference of longitude between two places C and D from the following longitudes ?

1. Longitude of C = 46°W
2. Longitude of D = 64° W

(a) 18° (b) 36°
(c) 110° (d) 220°

Sol: (a)

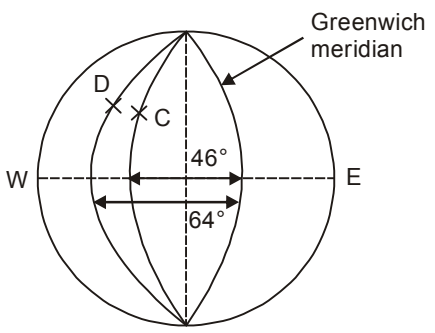

Longitude of C = 46°W

Longitude of D = 64°W

Difference of longitudes between places C and D

$$= 64° - 46° = 18°$$

19. If the focal length of lens (f), flying height (H) and height of ground above mean sea level (h) are known, then the scale at height 'h' (S_h) is equal to

(a) f/(H-h) (b) (H-h)/f
(c) (h-H)/2f (d) 2f/(h-H)

Sol: (a)

Focal length = f

Flying height = H

Elevation of ground above MSL = h

$$\text{Scale } (S_h) = \frac{f}{H-h}$$

20. The terrestrial photogrammetry can be divided into how many branches ?

(a) Four (b) Three
(c) Two (d) Five

Sol: (c)

The terrestrial photogrammetry can be divided into two branches:

(i) Plane-table photogrammetry.

(ii) Terrestrial stereo photogrammetry

The plane table photogrammetry consists essentially in taking a photograph of the area to be mapped from each of the two or three stations. The photograph perpendiculars may be oriented at any angle to the base, but usually from an acute angle with the latter. The main difficulty arises in the identifications of image points in a pair of photographs. In the case of homogeneous areas of sand or grass, identification becomes impossible. The principles of stereo photogrammetry, however, produced the remedy.

In terrestrial stereo photogrammetry, due to considerable improvement of accuracy obtained by the stereoscopic measurement of pairs of photographs, the camera base and the angles of intersection of the datum rays to the points to

be measured can be considerably reduced since the camera axes at the two stations exhibit great similarity to each other. The image points which are parallactically displaced relative to each other in the two photographs are fused to a single spatial image by the stereoscopic measurement.

21. Which one of the following is an aerial photograph taken with the camera axis directed intentionally between the horizontal and the vertical ?

(a) Tilted photograph (b) Oblique photograph
(c) Slanting photograph (d) Vertical photograph

Sol: **(b)**

Oblique photographs – Oblique aerial photographs are taken with a camera axis considerably inclined to the vertical. The camera axis is intentionally kept oblique from the vertical.

22. A plate load test is carried out on submerged soil using a 300 mm radius rigid plate. A load of 5 Tons resulted in a deflection of 1.20 mm. What is the elastic modulus of the soil by considering the Poisson's ratio as 0.50?

(a) 5216 kPa (b) 521.6 GPa
(c) 52.16 MPa (d) 52160 Pa

Sol: **(c)**

Deflection for rigid plate by Burmister's:

$$\Delta_R = \frac{\pi\left(1-\mu^2\right)qa}{2E}$$

Given that

$$a = 300 \text{ mm}$$

$$q = \frac{P}{\pi a^2}$$

$$P = 5 \text{ tonnes}$$

$$\Delta = 1.20 \text{ mm}$$

$$\mu = 0.5$$

Find out E_s

$$1.2 = \frac{\pi\left(1-0.5^2\right)\times 5\times 10^3}{\pi\times(300)^2}\times\frac{300}{2\times E}$$

$$E = \frac{1.18\times 5\times 10^3\times 300}{\pi\times(300)^2\times 1.2}$$

$$= 5.2167 \text{ kg/mm}^2$$

$$= 52.167 \text{ N/mm}^2$$

$$E = 52.16 \text{ MPa}$$

23. In case of horizontal curves in pavement, the purpose of super-elevation or banking of curves is to

(a) Counteract the centripetal acceleration produced as a vehicle rounds a curve
(b) Provide proper cross-drainage
(c) Prevent vehicle from sliding inwards
(d) Make road look good

Sol: **(a)**

24. Which of the following are the design elements in highway embankments ?

1. Height
2. Fill material
3. Settlement

Select the correct answer using the code given below:

(a) 1, 2 and 3 (b) 1 and 3 only
(c) 2 and 3 only (d) 1 and 2 only

Sol: **(a)**

The design elements in highway embankments are:

(i) Height
(ii) Fill material
(iii) Settlement
(iv) Stability of foundation
(v) Stability of slopes

25. Consider the following statements related to construction of bituminous pavements:

1. It is not possible to construct relatively thin bituminous pavement layers over an existing pavement.
2. In India, the bituminous construction is by and large adopted on the surface course.
3. The black top construction is in extensive use in developing nations.

Which of the above statements are correct ?

(a) 1 and 2 only (b) 2 and 3 only
(c) 1 and 3 only (d) 1, 2 and 3

Sol: **(b)**

It is possible to construct relatively thin bituminous pavement layers over an existing pavement. Therefore, these are commonly adopted as wearing course.

The black top construction is in extensive use in developing nations like, India where the cement as a construction material is in great demand for large number of other engineering projects.

26. The held water in subgrade soil forms ice crystals at some spots if the freezing temperatures continue for a certain period. These ice crystals grow further in size if there is a continuous supply of water due to capillary action and the depressed temperature continues. This results in raising of portion of the pavement structure known as

(a) Frost heave

(b) Frost melting

(c) Alternate freeze-thaw cycle

(d) Frost action

Sol: **(a)**

27. Consider the following statements related to IRC recommendations for the CBR method of design (IRC : 37-1970):

1. The CBR tests should be performed on remoulded soils on the field.
2. For the design of new roads, the subgrade soil sample should be compacted at OMC to proctor density.
3. In new constructions, the CBR test samples may be soaked in water for four days period before testing.

Which of the above statements are correct ?

(a) 1 and 2 only (b) 2 and 3 only

(c) 1 and 3 only (d) 1, 2 and 3

Sol: **(d)**

28. Which one of the following measures should be taken for maintaining rolling stock ?

(a) The different parts of rolling stock need not be cleaned every day.

(b) All axles completed service life need not be replaced.

(c) The parts of rolling stock which get worn out need not be replaced.

(d) Lubrication of all the reciprocating parts and bearings with a suitable lubricant should be done.

Sol: **(d)**

For maintaining the rolling stock, the following measures should be taken:

- Lubrication of all the reciprocating parts and bearings with a suitable lubricant should be done.
- The different parts of rolling stock should be cleaned every day.
- All axles which have completed their service life (normally a run of 3 lack-kms) should be replaced by new ones.
- The parts of rolling stock which get worn out should be immediately replaced

29. Space-mean speed represents

(a) the instantaneous speed of a vehicle at a specified section or location

(b) the effective speed with which a vehicle traverses a particular route between two terminals

(c) the average speed of vehicles in a certain road length at any time

(d) the average of instantaneous speeds of observed vehicles at the spot

Sol: **(c)**

30. A vehicle has a wheel base of 6.5 m. What is the off tracking while negotiating a curved path with a mean radius 32 m ?

(a) 1.32 m (b) 1.15 m

(c) 0.86 m (d) 0.66 m

Sol: **(d)**

Given that

$$\ell = 6.5 \text{ m}$$

$$R = 32 \text{ m}$$

$$\text{Off tracking} = \frac{\ell^2}{2R} = \frac{(6.5)^2}{2 \times 32} = 0.66\text{m}$$

31. A catchment has six rain gauge stations. In a year, the annual rainfall recorded by the gauges are as follows:

Station	A	B	C	D	E	F
Rainfall (cm)	82.6	102.9	180.3	110.3	98.8	136.7

For a 10% error in the estimation of the mean rainfall, what is the optimum number of stations in the catchment? (Take $\bar{P} = 118.6$, σ_{m-1} = 35.04 and ε = 10)

(a) 10 (b) 9

(c) 8 (d) 7

Sol: (b)

$$N = \left(\frac{C_v}{\varepsilon}\right)^2$$

$$C_v = \frac{\sigma_{m-1}}{\bar{P}} \times 100$$

$$= \frac{35.04}{118.6} \times 100 = 29.55$$

$$\therefore \quad N = \left(\frac{29.55}{10}\right)^2 = 8.73 \simeq 9$$

32. Which one of the following is defined as the process by which the water leaves a living plant during photosynthesis, through its leaves, to enter the atmosphere as water vapour?

(a) Transpiration (b) Evapotranspiration

(c) Stomata (d) Evaporation

Sol: (a)

Transpiration: Transpiration is the biological process by which water is lost in the form of water vapour from the aerial parts of the plants.

33. Which one of the following is a gap developed in the canal bank due to erosion of some portion of the bank ?

(a) Canal breach

(b) Sub canal

(c) Temporary outlet used for irrigation

(d) Fault

Sol: (a)

Canal breach: It is an opening or a gap developed in the canal bank due to erosion of some portion of the bank.

- When once water starts flowing out of such a breach, it starts becoming deeper and wider, unless remedial measures are taken immediately to plug the breach.
- The breaches in canal banks may be caused due to following reasons:
  - (i) Breach due to faulty design or construction of canal banks,
  - (ii) Breach due to overflow of the canal,
  - (iii) Breach due to seepage or piping,
  - (iv) Breach due to intentional cuts made by cultivators.

34. Which one of the following stages does the river bed consist of a mixture of boulders, gravels, shingles and alluvial sand deposits created by itself ?

(a) Rocky stage

(b) Incised river stage

(c) Boulder river stage

(d) Rivers in alluvial flood plains stage

Sol: (c)

River in Hills (upper reaches)

Incised or Rocky river stage
The flow channel is generally formed by the process of degradation (erosion).

Boulder river stage
The river bed in these reaches consist of a mixture of boulders, gravels, shingles and alluvial sand-deposits created by itself.

35. Which of the following are the only two factors which govern the storage capacity of the reservoir?

(a) Inflow to reservoir and the outflow from the reservoir

(b) Inflow and catchment area

(c) Catchment area and outflow

(d) Height of reservoir and catchment area

Sol: **(a)**

The inflow to the reservoir and the outflow from the reservoir are the only two factors which govern the storage capacity of a reservoir.

Increase in reservoir storage = Inflow – Outflow

36. Formation of successive bends of reverse order may lead to the formation of a complete S curve called

(a) Concave or outer edge

(b) Scouring

(c) Meander

(d) Convex or inner edge

Sol: **(c)**

Formation of successive bends of reverse order may lead to the formation of a complete S curve called meander.

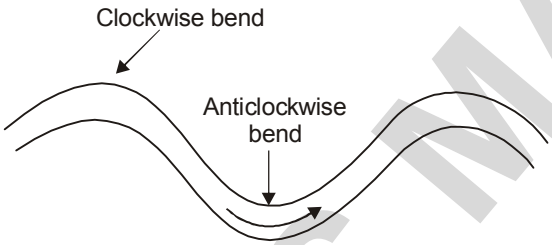

37. The monthly consumptive use values for paddy are tabulated below. What is average monthly consumptive use ?

Month	Dates	Rice (Loam Soil) C_u in cm
June	1 – 30 } Nursery	29.69
July	1 – 12 } Nursery	8.76
July	13 – 31	14.38
August	1 – 31	22.73
September	1 – 30	21.29
October	1 – 31	25.50
November	1 – 24	15.06

(a) 7.7 cm (b) 23.1 cm

(c) 26.69 cm (d) 137.41 cm

Sol: **(b)**

Month	Dates	Rice (Loam Soil) C_u in cm
June	1 – 30 } Nursery	29.69
July	1 – 12 } Nursery	8.76
July	13 – 31	14.38
August	1 – 31	22.73
September	1 – 30	21.29
October	1 – 31	25.50
November	1 – 24	15.06

$$\sum C_u = \begin{pmatrix} 29.69 + 83.76 + 14.38 + 22.37 \\ +21.29 + 25.50 + 15.06 \end{pmatrix}$$

$$= 137.41 \text{ cm}$$

Period of growth (in days) = (30 + 31 + 31 + 30 + 31 + 24) = 177 days

Average daily consumptive used

$$= \left[\frac{137.41}{177}\right] = 0.776 \text{ cm}$$

$\therefore$ Average monthly consumption = (0.776 × 30) = 23.28 cm

38. Water bearing stratum, having no confined impermeable over burden lying over it, is known as

(a) An unconfined aquifer

(b) An artesian aquifer

(c) Confined aquifer

(d) Controlled aquifer

Sol: **(a)**

The top most water bearing stratum having no confined impermeable over burden (i.e., aquiclude) lying over it, is known as an unconfined aquifer or non-artesian aquifer.

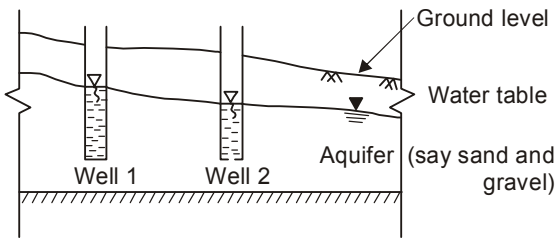

Note: Water level in well 1 and 2 will be equal to the level of the water table.

39. The permeable groynes made from timber stakes or wooden piles, are called

(a) Balli spurs (b) Tree spurs

(c) Balli crates (d) Wire crates

Sol: **(a)**

Permeable groynes: Permeable groynes do permit restricted flow through them. Permeable groynes, simply obstruct the flow, reducing its velocity and causing silt deposition.

The common materials used as permeable groynes, are:

(i) Trees used as groynes, called tree spurs.

(ii) Timber stakes or wooden piles, called balli spurs.

(iii) Stone filled in balli crates.

(iv) Stones filled in wire crates.

40. A reservoir with uncontrolled and ungated outlets is known as

(a) Retarding basin (b) Storage reservoir

(c) Controlled reservoir (d) Detention basin

Sol: **(a)**

Types of flood control reservoir:

(i) Storage reservoirs or Detention basin: It is a reservoir having gates and valves installation at its spillway and at its sluice outlets.

(ii) Retarding basin or Retarding reservoirs: It is a reservoir with uncontrolled and ungated outlets.

41. The distance between the outer edges of clockwise and anti-clockwise loops of the meander

(a) Meander length (b) Meander belt

(c) Meander ratio (d) Cross-overs

Sol: **(b)**

The various meander parameters are shown in figure and are defined below:

Meander Length (M_L) : It is the axial length of one meander, i.e. the tangential distance between the corresponding points of a meander.

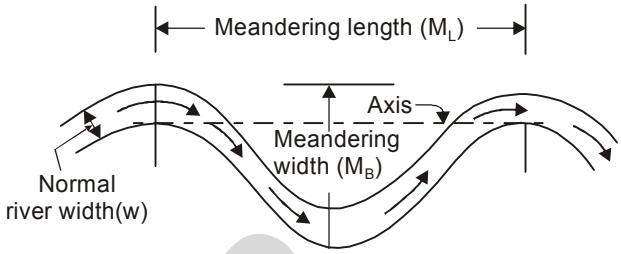

Meander Belt (M_B): It is the distance between the outer edges of clockwise and anti-clockwise loops of the meander.

Meander Ratio: It is the ratio of meander belt to meander length, i.e. M_B/M_L.

Tortuosity: It is the ratio of the length along the channel (i.e. actual length) to the direct axial length of the river reach.

Crossings or Cross-overs: The short straight reaches of the river, connecting two consecutive clockwise and anti-clockwise loops, are called crossings or cross-overs.

42. Which one of the following is the one which rests in a pervious stratum and draws it supply from the surrounding material ?

(a) Sidetrack well (b) Horizontal well

(c) Deep well (d) Shallow well

Sol: **(d)**

- Shallow well rests in a pervious stratum and draws its supply from the surrounding material.
- Deep well rests on an impervious 'mota' layer and draws its supply from the pervious formation below the mota layer, through a bore hole made into the 'mota' layer.

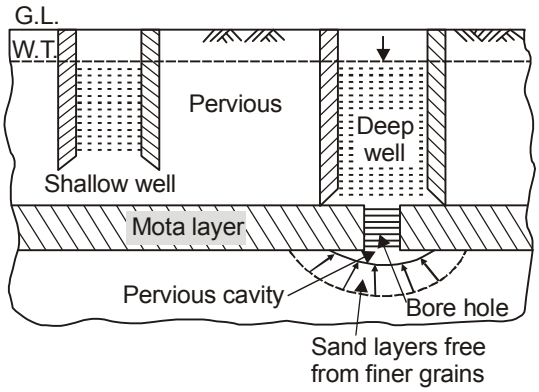

Fig. Shallow and deep dug wells.

43. The various types of water demand, which a city may have, may be broken down into which of the following classes ?

1. Domestic water demand
2. Industrial water demand
3. Demand for public uses

Select the correct answer using the code given below:

(a) 1 and 2 only (b) 2 and 3 only
(c) 1 and 3 only (d) 1, 2 and 3

Sol: (d)

Types of water demand:

1. Domestic water demand – water for drinking, cooking, bathing etc.
2. Industrial water demand.
3. Institutional water demand – water for schools, hospitals etc.
4. Water for public use – washing of roads, gardening etc.
5. Fire demand.
6. Losses and theft.

44. In a big city having population of 50 lakhs, if 6 moderate fires each of 3 hours break out in a day, what is the approximate amount of water required per person per day? (Assume 3 jet streams simultaneously throwing water from a hydrant with discharge of 1100 litres/minute/stream)

(a) less than 1 litre (b) between 1 –3 litres
(c) between 3-5 litres (d) 20 litres

Sol: (a)

Population = 50 lakhs = 5×10^6

Discharge from jet = 1100 lit/min/stream

Total jet = 3

Total discharge from jets

= 1100 × 3 lit/min

= 3300 lit/min

Water required at each location

= 3300 lit/min × 3 × 60 min.

= 594000 lit

Total location of fires = 6

Total water required

= 594000 × 6 lit

= 3564000 lit

Amount of water required per person per day

$$= \frac{3.564 \times 10^6}{5 \times 10^6} \text{ lit}$$

= 0.72 lit or less than 1 litre

45. For water supply scheme design of a town or a city, the suitable method of estimating future population by the end of the design period is

(a) increasing rate method
(b) decreasing rate method
(c) exponential curve method
(d) incremental decrease method

Sol: (c)

Exponential curve method

- Instead of assuming that the population is growing by a constant amount, the exponential model assumes that the population is growing at a constant rate. This may be appropriate for expanding communities unaffected by any constraints. The increase in population ($P_{n+1} - P_n$), is proportional to the represent population, P_n
- i.e. $P_{n+1} - P_n = \gamma P_n$; where, γ is the growth rate.

$$P_1 - P_0 = \gamma P_0 \text{ or } P_1 = (1+\gamma)P_0$$

$$P_2 - P_1 = \gamma P_1 \text{ or } P_2 = (1+\gamma)P_1 = (1+\gamma)^2 P_0$$

$$P_n = (1+\gamma)^n P_0$$

$-\gamma$ and P_0 can be calibrated by least square regression method after linearising the above equation.

Logistic Trend Model

- The population initially grows moderately, picks up when the economic base reaches

a certain minimum level, and ultimately reaches a saturation level. This cycle of population growth pattern is best depicted by a logistic model.

- The rate of growth (γ_t), as in exponential model, is not constant, but is a linearly decreasing function of the demand level (P_t).

i.e. $\gamma_t = a - bP_t$ ...(1)

But, $\gamma_t = \frac{1}{P_t}\frac{dP_t}{dt}$ ...(2)

therefore, $\frac{dP_t}{dt} = P_t(a - bP_t)$ ...(3)

The solution to the above differential equation is the logistic model

$$P_t = \frac{1}{\left(\frac{1}{P_0} - \frac{b}{a}\right)e^{-at} + \frac{b}{a}} \quad ...(4)$$

From (1), at $t = \infty$, $\gamma_t = 0$ and therefore,

$P_\infty = a/b$

Logistic curve method is a part of exponential curve method which is used when growth rate of population due to births, deaths and migrations takes place under normal situation and it is not subjected to any extra-ordinary changes like an epidemic, earthquake or any natural disaster etc.

46. Which one of the following does NOT affect the permeability of soils?

(a) Void ratio (b) Soil strength

(c) Grain size (d) Temperature

Sol: (b)

Factors affecting permeability of soils

- Particle size
- Effects of void ratio
- Effects of permeant (viscosity and temperature)
- Shape of particles
- Hydraulic conductivity of unsaturated soils
- Effect of entrapped air
- Effect of soil fabric
- Effect of adsorbed cation on clay surface
- Effect of effective stress
- Activity of clay
- Anisotropy
- Compactive water content of fine grained soils
- Remoulding in clay

47. Consistency is a term used to indicate

(a) The quantitative analysis of soils

(b) the degree of firmness of cohesive soils

(c) the fineness of non-cohesive soils

(d) the fineness of clay soils

Sol: (b)

Consistency is a term which is used to describe the degree of firmness of a soil in a qualitative manner by using descriptions such as soft, medium, firm, stiff or hard. It refers to the resistance offered by it against forces that tend to deform or rupture the soil aggregate. Consistency is directly related to strength and depends on moisture content of soil.

48. The primary function of geogrids is

(a) connecting two layers

(b) separators

(c) reinforcement

(d) protection from corrosion

Sol: (c)

Geogrids-Geogrids are geosynthetic materials used as reinforcement in construction works. Geogrids can be categorized as geosynthetic materials that are used in the construction industry in the form of a reinforcing material. It can be used in the soil reinforcement or used in the reinforcement of retaining walls and even many applications of the material are on its way to being flourished. The high demand and application of Geogrids in construction are due to the fact that it is good in tension and has a higher ability to distribute load across a large area.

49. Which of the following is/are the laboratory methods of determination of coefficients of permeability of soils?

1. Constant head permeability method

2. Falling head permeability method

Select the correct answer using the code given below:

(a) 1 only (b) 2 only

(c) Both 1 and 2 (d) Neither 1 nor 2

Sol: (c)

Both methods are laboratory methods used to determine coefficient of permeability of soils.

50. Which one of the following characteristics is NOT measured by geophysical method of soil exploration?

(a) Magnetism (b) Density

(c) Electrical resistivity (d) Plasticity

Sol: (d)

Geophysical surveys determine stratification of soil and rocks by making use of difference in the physical properties like seismic wave velocity, electrical conductivity, Magnetism, elastic moduli and density of geological formations in the area.

51. Which one of the following is a method of wet mechanical analysis of a fine-grained material?

(a) Partial sedimentation

(b) Sedimentation into dirty water

(c) Observation of partial sedimented soil

(d) Elutriation

Sol: (d)

Wet mechanical analysis or sedimentation analysis methods:

- Decantation
- Elutriation
- Accumulative sedimentation
- Fractional sedimentation
- Pipette
- Hydrometer
- Manometer
- Centrifugal

Elutriation: It is process of purifying by washing, straining or decanting.

The common usage in size analysis refers practically entirely to separation by rising currents.

The principle upon which the Elutriation method is based is that in rising currents of various magnitudes, a grading is accomplished because the particle settling velocity varies with the size of particles. Water and air have been the fluids most widely used; the former for analysis of sediments or particles initially immersed in water, and the latter for cement and other material in dry powder form.

52. According to Highway Research Board (HRB) classification system, which one of the following is NOT relevant for dependency of group index of soil?

(a) The amount of material passing the 75-micron IS sieve

(b) The liquid limit

(c) The plastic limit

(d) The shrinkage limit

Sol: (d)

Group index, GI = 0.2 a + 0.005 ac + 0.01 bd

where,

a = that part of the percent passing the 75 μ sieve (–75 μ) greater than 35 and not exceeding 75, expressed as a positive whole number (range 1 to 40)

b = that part of the percent passing the 75 μ sieve greater than 15 and not exceeding 55, expressed as a positive whole number (range 1 to 40)

c = that part of liquid limit greater than 40 and not greater than 60, expressed as a positive whole number (range 1 to 20)

d = that part of the plasticity index (liquid limit – plastic limit) greater than 10 and not exceeding 30 expressed as a positive whole number (range 1 to 20)

53. An oven-dired soil having a mass of 200 g is placed in pycnometer which is then completely filled with water. The total mass of the pycnometer with water and soil inside is 1605 g. The pycnometer filled with water alone has a mass

of 1480 g. What is the specific gravity of the soil?

(a) 2.21 (b) 2.41

(c) 2.67 (d) 3.32

Sol: (c)

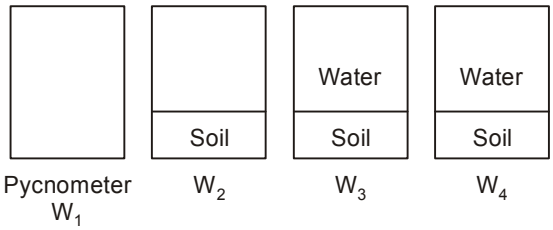

Given, $W_s = 200$ g

$W_3 = 1605$ g

$W_4 = 1480$ g

$$W_4 - W_1 = W_3 - W_1 - W_s + \frac{W_s\gamma_w}{G_s\gamma_w}$$

$$W_s = \frac{(W_3 - W_4)G_s}{G_s - 1}$$

$$200 = (1605 - 1480)\frac{G_s}{G_s - 1}$$

$$\frac{G_s - 1}{G_s} = \frac{125}{200} = 0.625$$

$$G_s = \frac{1}{1 - 0.625} = 2.67$$

54. A soil sample has a porosity of 40 percent. The specific gravity of solids is 2.70. What is voids ratio?

(a) 0.467 (b) 0.567

(c) 0.667 (d) 0.743

Sol: (c)

$n = 40\%$ or 0.4

$G_s = 2.7$

We know,

$$n = \frac{e}{1+e}$$

or, $$e = \frac{n}{1-n}$$

$$= \frac{0.4}{1-0.4} = \frac{0.4}{0.6} = \frac{2}{3} = 0.667$$

55. Which one of the following is used for determining different strata in the earth's crust?

(a) Mine survey

(b) Topographic survey

(c) Archaeological survey

(d) Geological survey

Sol: (d)

Geological survey: These surveys are conducted to obtain information about different strata of the earth's surface for the purpose of geological studies.

56. Consider the following statements related to set out the curve using tow theodolite method:

To set out the curve,

1. set up a theodolite over T_1 and another over T_2.
2. set the vernier of each of the instruments to zero.
3. direct the instrument at T_1 to the ranging rod at the point of intersection B and bisect it.

Which of the above statements are correct?

(a) 1 and 2 only (b) 1 and 3 only

(c) 2 and 3 only (d) 1, 2 and 3

Sol: (d)

Two Theodolite Method

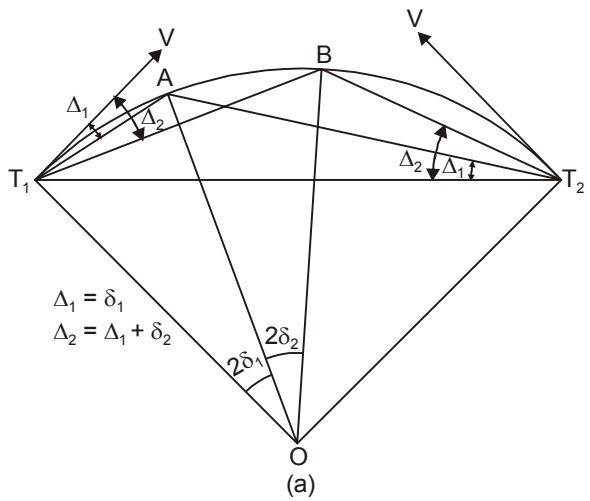

(a)

The following procedure is used for setting out the curve.

1. Set up one theodolite at T_1 &the other at T_2.

Set the vernier A of each theodolite at zero. Clamp the upper plates.

2. Direct the telescope of the theodolite at T_1 to the intersection point V, and clamp the lower plate.

   Now direct the telescope of the theodolite at T_2 to the tangent point T_1, and clamp the lower plate.

   Hereby, both the telescopes are properly oriented.

3. Loosen the upper clamp of the theodolite at T_1, and set the vernier A to the deflection angle Δ_1 for the first point A.

4. Loosen the upper clamp of the theodolite at T_2 and set the vernier A to the angle Δ_1.

   Now the lines of sight of both the theodolites are directed towards the point A.

5. Move a ranging rod near the expected point A until it is bisected simultaneously by the cross-hairs of both the theodolites. Locate the point A on the ground at the arrow point.

6. To locate the second point B, set the verniers of both the theodolites at angle Δ_2, and repeat steps (3) to (5).

7. Locate all other points in the same manner.

57. In setting out location of piers, the central points of the piers are located by intersection of sights, simultaneous sights beign taken from

(a) the ends of a base (b) the top of the pier

(c) the back of the pier (d) the front of the pier

Sol: **(a)**

Setting out of a Bridge

While setting out the bridges, following two problems are encountered.

1. To determine the accurate distance between a point on one bank of a river and a point on the other bank, both the points being predetermined on the centre line of the road or railway.

2. To locate the central points for piers of the bridge.

Locating the pier positions

Following steps are involved:

1. Set out two base lines approximately perpendicular to the centre line AB. (Figure a).

2. Measure the base line AC and BD accurately. The lengths of each base line should preferably be equal to the centre-line AB but in no case less than three fourth of this.

3. Measure the angles of the triangles ABC and ABD by method of repetition and the triangular error should not exceed 5" and for important work 2".

4. Compute the length of AB by solving ΔABC and also by solving ΔABD.

5. If the two values do not differ much, take their mean is the most probable length of the centre line AB.

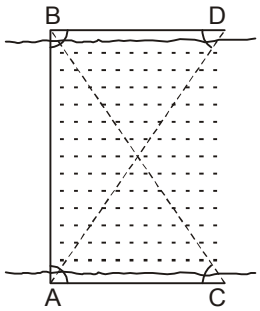

Figure (a)

For locating the position of piers, the following steps are involved.

1. After obtaining the length of centre line AB, calculate the interdistances Ap_1, p_1p_2 and p_2B where p_1 and p_2 are the centre positions of the piers.

2. Apply sine formula to Δ_s ACp_1, ACp_2, BDp_2 to get the values of angles ACp_1, ACp_2, BDp_1 and BDp_2.

3. Set up transists at A and C. instrument at C is directed to A and an angle Acp_1 is set so that telescope sights towards p_1.

4. By simultaneous observations, locate the position of p_1.

5. Set up a theodolite at D and set up angle BDp_1.If the location of p_1 is correct, the line of sight Dp_1 shall pass though p_1.

6. Locate the pier p_2 in a similar way.

7. Establish reference points on the banks in line of Cp_1, Cp_2 and Dp_2, Dp_1 for reference during construction.

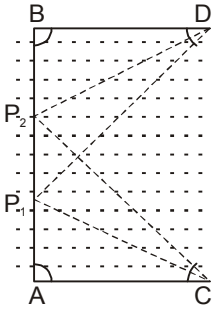

Figure (b)

58. Which one of the following tapes is generally used for work of the highest precision?

(a) Linen tape
(b) Metric woven metallic tape
(c) Metric steel tape
(d) Invar tape

Sol: (d)

Order of tapes with highest precision.

Invar tapes > Metric steel tape > Metric woven metallic tape > Linen tape

59. A vertical circle which is at right angles to the meridian is also known as

(a) an altitude (b) a co-altitude
(c) a prime vertical (d) an azimuth

Sol: (c)

Prime vertical: A great circle passing from Zenith (Z), Nadir (N) and perpendicular to observer's meridian.

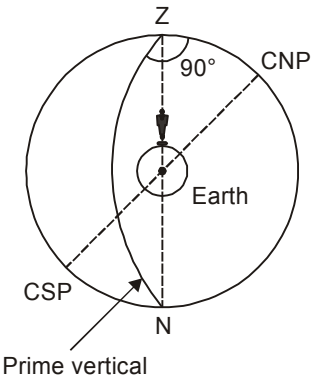

Vertical circle: All circles passing from Z and N on Celestial sphere.

60. Which one of the following is a staff reading taken on a point whose elevation is to be determined?

(a) Fore sight (b) Back sight
(c) Intermediate sight (d) Line of sight

Sol: (a)

Back Sight

A back sight (B.S) is the first staff reading taken after setting up the instrument in any position. This will always be a reading on the point of known elevation.

Fore Sight

A fore sight (F.S) is the last staff reading taken before moving the instrument. This will always be reading on a point whose elevation is to be determined.

This reading indicates the shifting of the instrument.

Intermediate Sight

An intermediate sight (I.S) is any staff reading taken on the point of unknown elevation after the back sight and before the fore sight.

This is necessary when more than two staff readings are taken from the same position of the instrument.

Between IS and FS ,most appropriate answer will be FS

61. Which one of the following is NOT a factor affecting losses and wastes in water supply scheme?

(a) Metering
(b) Unauthorised connections
(c) Water demand
(d) Pressure in the distribution system

Sol: (c)

Metering, unauthorised connections and pressure in distribution systems affects losses and wastes in water supply scheme.

62. Which one of the following forecasting methods for population is also known as uniform increase method?

(a) Arithmetic increase method

(b) Decreasing rate method

(c) Geometric increase method

(d) Simple geographical method

Sol: (c)

Geometric increase method is also known as uniform increase method or compounding method.

63. Storage capacity of a reservoir can be estimated by using

(a) Cuboidal formula (b) Cylindrical formula

(c) Prismoidal formula (d) Conical formula

Sol: (c)

64. Modern commerical turbidimeter which works on the principle of scattering of light at right angles to the incident light, is callled

(a) Spectrometer (b) Nephelometer

(c) Optimeter (d) Lightmeter

Sol: (b)

Nephelometer works on the principle of scattering of light at right angles to the incident light.

65. Which one of the following is a disease caused by protozoal infections under water-borne diseases?

(a) Infectious hepatitis (b) Amoebic dysentery

(c) Infectious jaundice (d) Poliomyelitis

Sol: (b)

Water Borne Diseases

Bacteria – Typhoid fever (salmonella bacteria typhi which is responsible for enteric fever)

– Cholera (vibrio cholerae boactrum)

– Bacillary Dysentry (Sonne bacilus)

Virus – Jaundice (Hapatitis virus)

– Poliomyelitis

Protozoa – Amoebic dysentry

66. Which of the following methods adopted for purifying the public water supplies?

1. Screening
2. Sedimentation aided with coagulation
3. Disinfection

Select the correct answer using the code given below:

(a) 1 and 2 only (b) 2 and 3 only

(c) 1 and 3 only (d) 1, 2 and 3

Sol: (d)

Screening → Coagulation → Flocculation → Sedimentation → Filtration → Disinfection

67. According to Stoke's law, if the diameter (d) is less than 0.1 mm, then the settling velocity of spherical particles is directly proportional to

(a) d^2 (b) d^3

(c) d (d) $d^{1/2}$

Sol: (a)

Settling velocity of particle size less than 0.1 mm

$$V_s = \frac{(\gamma_s - \gamma_w)\, d^2}{18\mu}$$

V_s = Settling velocity

γ_s = Unit weight of solid particles

γ_w = Unit weight of water

d = Dia of spherical particle

μ = Dynamic viscosity

68. What is the settling velocity of a discrete particle in water under conditions when Reynold's number is less than 0.5? (Take the diameter and specific gravity of the particle are 5×10^{-3} cm and 2.65 respectively and Kinematic viscosity of water at 20°C is 1.01×10^{-2} cm²/s and g = 9.81 m/s²)

(a) 0.22 cm/s (b) 0.35 cm/s

(c) 0.14 cm/s (d) 0.46 cm/s

Sol: (a)

$$d = 5\times10^{-3}\text{ cm} = 5\times10^{-5}\text{ m}$$
$$G_s = 2.65$$
$$\nu = 1.01\times10^{-2}\text{ cm}^2/\text{s}$$
$$= 1.01\times10^{-6}\text{ m}^2/\text{s}$$
$$g = 9.81\text{ m/s}^2$$

Settling velocity of particle

$$V_s = \frac{(\gamma_s - \gamma_w)d^2}{18\mu} \quad Re < 1$$

$$V_s = \frac{(G_s - 1)\rho_w g d^2}{18\mu}$$

$$= \frac{(G_s - 1)gd^2}{18\nu}$$

$$= \frac{(2.65-1)\times(5\times10^{-5})^2 \times 9.81}{18\times1.01\times10^{-6}}$$

$$= 2.22\times10^{-3}\ m/s$$

$$= 0.22\ cm/s$$

69. The rate of filtration of pressure filter as compared to rapid gravity filter is about

(a) 10 times (b) 15 times

(c) 2 to 5 times (d) 6 to 8 times

Sol: (c)

Rate of filtration of rapid gravity filter

= (3000 – 6000) $\ell/hr/m^2$

Rate of filtration of pressure filter

= (6000 – 15000) $\ell/hr/m^2$

Which is 2 to 5 times more than rapid gravity filter.

Directions:

Each of the next **Six (06)** items consists of two statements, one labelled as the 'Statement (I)' and the other as 'Statement (II)'. You are to examine these two statements carefully and select the answers to these items using the codes given below:

Codes:

(a) Both Statement (I) and Statement (II) are individually true and Statement (II) is the correct explanation of Statement (I)

(b) Both Statement (I) and Statement (II) are individually true but Statement (II) is NOT the correct explanation of Statement (I)

(c) Statement (I) is true but Statement (II) is false

(d) Statement (I) is false but Statement (II) is true

70. **Statement (I):** The stone should be well seasoned.

Statement (II): The resistances of stone against the wear and tear due to natural agencies should be high.

Sol: (b)

71. **Statement (I):** The tensile strength (or ultimate strength) is defined as the highest value of engineering stress.

Statement (II): For ductile materials, the tensile strength corresponds to the point at which necking starts.

Sol: (a)

Both the statements are correct.

In stress-strain curve highest value of engineering stress is defined as ultimate tensile strength of material and after this value of stress necking of the material starts and even the smaller value of load leads to continued deformation due to which curve starts declining and engineering stress will be lesser in later portion of stress-strain curve.

72. **Statement (I):** The use of slope deflection method is limited to structures which are not highly indeterminate.

Statement (II): The slope deflection equations can be obtained by using the principle of superposition by considering separately the moments developed at each support due to each of the displacements, and then the loads.

Sol: (d)

Force method of Analysis :

It requires writing compatibility equations that relates the unknown forces or moments in a structure.

Note : Use of force method analysis is limited to structures which are not highly indeterminate because much work is required to set up the compatibility equations, also each equation written involves all the unknowns, making it difficult to solve the resulting set of equations.

73. **Statement (I):** In the partial safety factor-based design format, the design capacity is defined by considering the corresponding partial safety factors.

Statement (II): The partial safety factors are associated with the inherent and modeling uncertainties.

Sol: (a)

The design capacity is obtained by reducing the actual capacity by considering the partial factor as it is done in LSM.

These partial safety factors are associated with the inherent and modelling uncertainties related to strengths and design actions.

Here, both the statements are true and statement-II is the correct explanation of statement-I.

74. **Statement (I):** The theory of reinforced concrete is developed with the assumption that there is perfect bond between steel and concrete, in other words, there is no slip.

Statement (II): In case of ribbed bars, there is no need to check the bond failures.

Sol: (c)

In the theory of reinforced concrete, it is assumed that there is perfect bond between steel and concrete so that no slippage is there. This ensures proper load transfer from the steel reinforcement to concrete. So statement (I) is correct.

Wheather it is a ribbed bar or plain bar, it is required to check the bond strength by providing proper development length to avoid bond failures, so statement (II) is incorrect.

Hence option (c) is correct

75. **Statement (I):** The boundary layer thickness decreases as the distance from the leading edge increases.

Statement (II): Greater is the kinematic viscosity of the fluid greater is the boundary layer thickness.

Sol: (d)

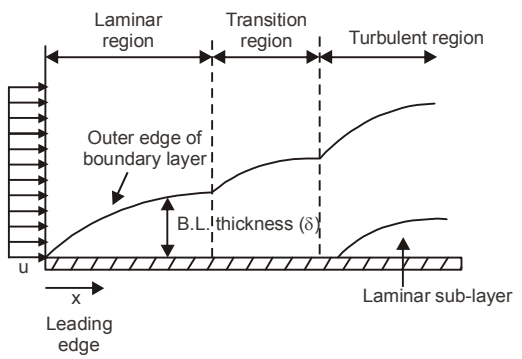

Various factors which influence the boundary (B.L.) thickness forming along a flat plate are as follows :

- The B.L. thickness (δ) increases as the distance x from leading edge increases ($x\uparrow, \delta\uparrow$).
- δ decreases as free stream velocity (v) increases ($v\uparrow, \delta\downarrow$)
- δ increases as the kinematic viscosity (ν) increases. ($\nu\uparrow, \delta\uparrow$)
- When free stream velocity (v) increases in flow direction, boundary layer growth is reduced.
- When free stream velocity (v) increases in the flow direction, flow near the boundary is further retarded; boundary layer is susceptible to separation.
- The boundary layer is affected by the pressure gradient in the direction of flow.

76. Which one of the following statements is NOT correct regarding the relationships between bending moment, shear force and applied load?

(a) The rate of change of shear force along a beam is equal to the distributed load

(b) The rate of change of bendign moment along a beam is equal to the shear force

(c) The rate of change of bending moment along a beam is equal to the distributed load

(d) The shear force and bending moment at free end is always zero

Sol: (c)

$$\frac{dv}{dx} = W_x$$

$$\frac{dM}{dx} = V_x$$

- Statement (c) is incorrect, because rate of change of bending moment along a beam is equal to the shear force at that section not the distributed load.
- Although it is not necessary to be shear force and bending moment zero at free end, but

still in practical conditions, some distance (very small) is required to develop shear force and bending moment. Hence, at the outermost point they can be assumed as zero.

- One can go for both option (c) and (d) but (c) is more appropriate.

77. What is the support reaction V_G from the following figure?

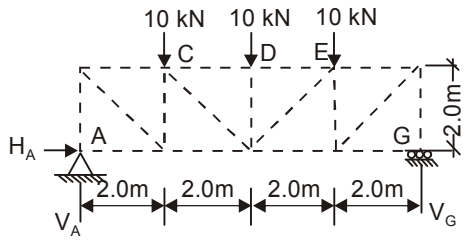

(a) 15 kN (upward)

(b) 20 kN (upward)

(c) 15 kN (downward)

(d) 20 kN (downward)

Sol: (a)

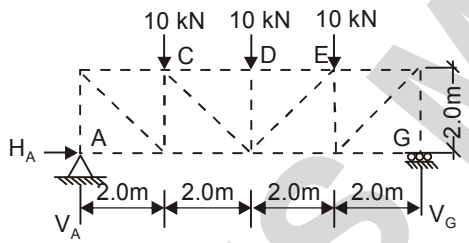

$$\sum M_A \circlearrowleft + = 0$$

$$\Rightarrow 10\times 2+10\times 4+10\times 6-V_G\times 8=0$$

$$\Rightarrow \quad V_G = \left(\frac{120}{8}\right)=15\,\text{kN(upward)}$$

78. Consider the following assumptions for pure bending theory:

1. The material is heterogeneous and isotropic.
2. The stress is purely longitudinal and local effects near concentrated loads will be neglected.
3. The radius of curvature is large compared with the dimensions of the cross-section

Which of the above statements are correct?

(a) 1 and 2 only (b) 2 and 3 only

(c) 1 and 3 only (d) 1, 2 and 3

Sol: (b)

- In pure bending theory, material is assumed as homogeneous and isotropic, hence statement-I is incorrect.
- Both statement-2 and statement-3 are correct.

79. For a fixed-connected collar type of support connection in coplanar structures, the number of unknown(s) is/are

(a) three and the reactions are two forces and a moemnt component

(b) one and the reaction is a moment component

(c) two and the reactions are two forces (one horizontal and one vertical)

(d) two and the reactions are a force and a moment

Sol: (d)

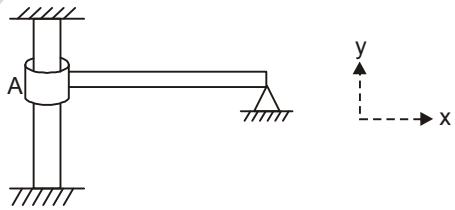

Support A is collar type fixed-connected connection.

- For planar loading (i.e. in x-y plane) reactions developed are F_x and M_z. Hence, f_y will be zero (assuming collar to be frictionless).
- Hence, option (d) is the correct answer.

80. For a rectangular beam of 4m long with 100 mm wide and 200 mm deep, it carries a shear force of 100 kN. What is the maximum shear (τ_{max}) due to the bending of rectangular section?

(a) 2.5 N/mm^2 (b) 5 N/mm^2

(c) 7.5 N/mm^2 (d) 10 N/mm^2

Sol: (c)

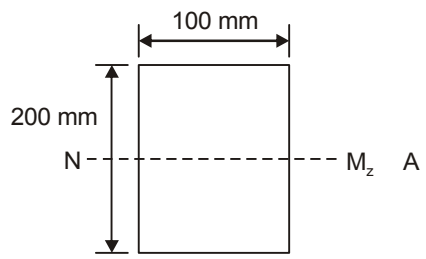

Shear force (V) at the section = 100 kN

$$\tau_{avg} = \frac{V}{Area} = \frac{100\times10^3}{100\times200} = 5 N/mm^2$$

As we know, for rectangular section :

$$\tau_{max} = \frac{3}{2}\tau_{avg}$$

$$= \frac{3}{2}\times5 = 7.5\ N/mm^2$$

81. What is the maximum deflection (y_{max}) for a cantilever beam of span l subjected to a point load acting at a distance a from the fixed end as shown in figure? (Take Young's modulus as E and moment of inertia of beam section as I)

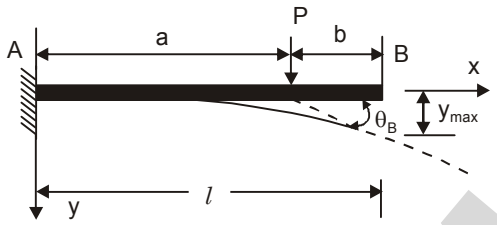

(a) $y_{max} = \frac{Pa^2}{6EI}(3l-a)$

(b) $y_{max} = \frac{Pa^2}{3EI}(3l-a)$

(c) $y_{max} = \frac{3Pa^2}{2EI}(3l-a)$

(d) $y_{max} = \frac{Pa^2}{2EI}(3l-a)$

Sol: (a)

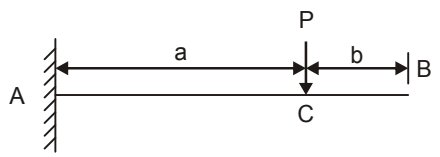

$$\delta_{max} = \delta_B = \delta_C + \theta_C * b$$

$$\delta_{max} = \frac{Pa^3}{3EI} + \frac{Pa^2}{2EI} * b$$

$$= \frac{Pa^2}{6EI}(2a+3b)$$

$$= \frac{Pa^2}{6EI}(3(a+b)-a)$$

$$= \frac{Pa^2}{6EI}(3l-a)$$

82. What is the maximum tension (approximately) in the cable as shown in figure, if it carries a uniform horizontally distributed load of intensity 120 kN/m?

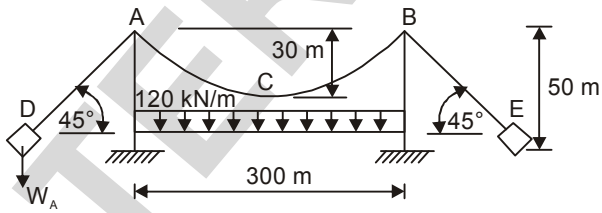

(a) 48.5 kN (b) 48.5 MN

(c) 485 kN (d) 4850 N

Sol: (b)

Horizontal thrust, $H_A = \frac{wl^2}{8h}$

$$= \left[\frac{120\times(300)^2}{8\times30}\right]$$

= 45000 kN

= 45 MN

Vertical reaction, $V_A = \left[\frac{wl}{2}\right] = \left[\frac{120\times300}{2}\right]kN$

= 18000 kN

= 18 MN

∴ Maximum tension in cable, T_{max}

$$= \sqrt{(H_A)^2+(V_A)^2}$$

$$= \sqrt{(45)^2+(18)^2}$$

= 45.4665 MN

83. Consider the following statements:

1. For a given load, the deflection of an indeterminate strucutre is smaller than that of determinate structure.
2. For a given load, the maximum stress of an indeterminate structure is higher than that of determinate structure.
3. For a given load, the maximum stress of an

Get up to

100% Scholarship

Write Online from Anywhere

For

ESE 2023 & GATE 2023

Aspirants

Exam Date

27th March

Time

6:00 P.M - 7:00 P.M

MASTER TALENT REWARD EXAM (MTRE)

A National Level
Online Scholarship Test

Hurry Up!!!!
Last date of
MTRE Registration is
19th March

Registration Fee ₹50/-

Register Now

To get the most out of the MTRE, visit iesmaster.org/master-talent-reward-exam

IES MASTER
Institute for Engineers (IES/GATE/PSUs)

Call 80100 09955 | 97118 53908
Email: mtre@iesmaster.org

indeterminate structure is smaller than that of determinate structure

Whch of the above statement is/are correct

(a) 1 and 2 only (b) 2 only

(c) 1 and 3 only (d) 3 only

Sol: (c)

For a given load both stress and deflection will be smaller in indeterminate structure as compare to that in determinate structure.

84. What is the degree of kinematic indeterminacy of the truss as shown in figure

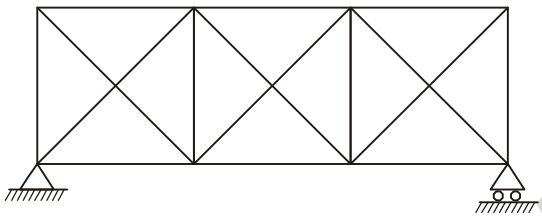

(a) 10 (b) 11

(c) 12 (d) 13

Sol: (d)

Kinematic indeterminacy (D_k) = 2J – r

for plane pin jointed frame

where, J = No. of joints = 8

r = No. of reactions = 3

$\therefore$ $D_k = 2 \times 8 - 3 = 13$

85. Which one of the following statements is NOT correct?

(a) The influence lines are constructed for establishing the maximum design forces at critical sections produced by moving loads

(b) As a moving load passes over a structure, the internal forces at each point in the structure do not vary

(c) To ensure the safety of a structure, the capacity of section should be greater than or equal to all the combination of loads

(d) The maximum deflection occurs at the centre of a simply supported beam, when a concentrated load applied at the mid-span

Sol: (b)

86. Two loads of 40 kN and 60 kN are moving towards support B as shown in figure. What is the maximum negative shera force at B?

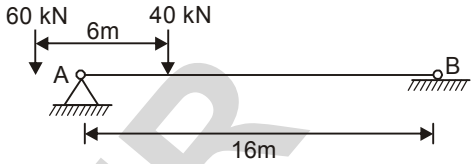

(a) –77.5 kN (b) –7.75 kN

(c) –37.5 kN (d) –3.75 kN

Sol: (a)

Load position for maximum negative shear force at B :

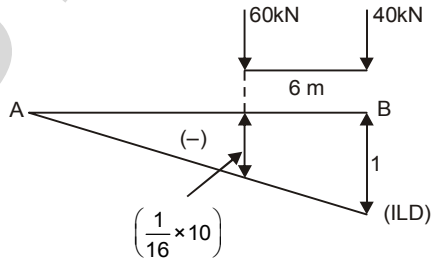

Absolute maximum negative shear

$$= -\left[1\times 40 + \frac{10}{16}\times 60\right] = -77.5 \text{ kN}$$

87. Consider the following statements related to the uses of computer programs in the structural analysis:

1. To analyze a truss with rigid joints would be lengthy computation by the classical methods of analysis.
2. The rigid joints (in truss analysis) are assumed to be pinned joints by the designers to simplify the problem.
3. The computer programs enable to consider the real situation (rigid joints) and also give the accurate results in quick time.

Which of the above statements are correct?

(a) 1 and 2 only (b) 2 and 3 only

(c) 1 and 3 only (d) 1, 2 and 3

Sol: (d)

- Joints in most trusses are constructed by

connecting members to gusset plates by welds, rivets, or high-strength bolts, thus joints are usually rigid.

- To analyse a truss with rigid joints (a highly indeterminate structure) would be a lengthly computation by classical methods of analysis. Thus, truss analysis has been simplified by allowing designers to assume pinned joints.
- Now a days, computer programs are available, by which we can analyse both determinate and indeterminate trusses as rigid-jointed structure to provide a more precise analysis, and the limitation that load must be applied at joints is no longer a restriction.

88. If the load is transmitted by bolts or rivets through some but not all the cross-sectional elements of the member, the effective area A_e is computed by using net area A_n and the reduction coefficient U as

(a) $A_e = U A_n$ (b) $A_e = A_n/U$

(c) $A_e = 0.87U A_n$ (d) $A_e = 0.66 U A_n$

Sol: (a)

If the load is transmitted by bolts or rivets through some but not all the cross-sectional elements of the member than the effective area will be less than net area and hence reduction coefficient 'U' shall be multiplied with A_n.

However, for welds instead of A_n, A_g can be used.

For load transmitted by botlsor rivets.

$$A_e = UA_n$$

For load transmitted by weld

$$A_C = UA_g$$

89. If the net end moments of a compression member are zero then such member is called

(a) beam column

(b) axially loaded column

(c) a truss

(d) a girder

Sol: (b)

90. Consider the following factors that affect that behavior of a column under a compression load:

1. The stress-strain properties remain constant throughout the section
2. The column may not be perfectly straight as the load is applied to it.
3. End conditions may vary from case to case

Which of the above statements are being ignored in the Euler approach?

(a) 1 and 2 only (b) 1 and 3 only

(c) 2 and 3 only (d) 1, 2 and 3

Sol: (d)

The Euler approach ignores following factors that affect the behaviour of a column under a compression load:

(i) The stress-strain properties do not remain constant throughout the section.

(ii) Residual stresses due to cooling after rolling the steel section and those imposed by welding during construction exist in section before loading.

(iii) The column may not be perfectly straight as the load is applied to

(iv) Due to construction details, the load is not perfectly concentric.

(v) End connections vary from case to case.

(vi) Secondary stresses due to bending are developed in the section due to a small deflection in the column.

(vii) Twisting may occur during loading.

91. Consider the following statements regarding the slabs:

1. When the longer span to shorter span ratio is greater than or equal to two, it is a two-way slab
2. In one-way slab, the load transfer is chiefly by bending in the shorter direction.
3. In two-way slabs, the load transferred by bending in both orthogonal directions.

Which of the above statements is/are correct ?

(a) 1 and 2 only (b) 3 only

(c) 2 and 3 only (d) 1 and 3 only

Sol: (b)

- A slab supported on all edges with longer span to shorter span ratio less than or equal to two is called a two-way slab.

  So statement '1' is incorrect

- In one-way slab, the load transfer is chiefly by bending in the shorter direction when the slab is supported on all the four edges. However, the load transfer is by bending in the transverse direction of supports for two sides support one way slab. So, statement '2' is in correct

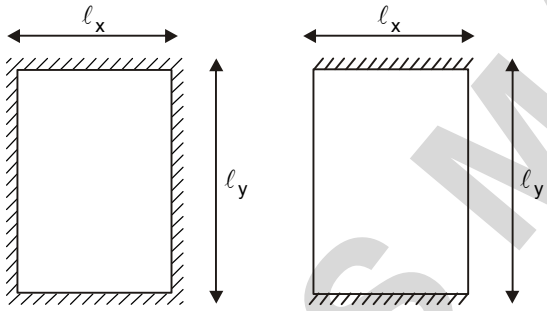

(load transfer by bending along ℓ_x i.e. shorter direction)

(load transfer by bending along ℓ_y as the slab is supported on two edges only.)

- In two-way slabs, live load is transferrred by bending in with longer and shorter direction. So statement '3' is correct.

92. Which one of the following statements is NOT correct in reinforced concrete design ?

(a) In the cracked section, concrete below the neutral axis is neglected in calculations.

(b) When section is subjected to external loading, resisting moment is developed due to compression in concrete and tension in steel.

(c) In the cracked section, the steel area below the neutral axis is converted into equivalent concrete area.

(d) The neutral axis depth does not depend on the modular ratio.

Sol: (d)

- In cracked section analysis, concrete below the neutral axis is neglected in MOR calculation as the concrete below neutral axis is subjected to tensile stress. So statement 'a' is correct.
- Moment of resistance is developed by the compressive force in concrete and tensile force in steel. So statement 'b' is correct.
- In working stress method, steel is converted into equivalent concrete by using modular ratio concept. For both uncracked and uncracked section the steel is converted into equivalent concrete area. So statement 'c' is correct.
- The neutral axis depth is dependent on modular ratio.

93. A concrete beam is post-tensioned by a cable carrying an initial stress of 1000 N/mm^2. The slip at the jacking end was observed to be 5 mm. The modulus of elasticity of steel is 210 kN/mm^2. What is the percentage loss of stress due to anchorage slip if the length of the beam is 30 m ?

(a) 3.5% (b) 35%

(c) 0.35% (d) 30.5%

Sol: (a)

Loss of prestress due to anchorage slip $\varepsilon_s E_s$

ε_s = Anchorage slip strain

E_s = modulus of elasticity of steel

$$\varepsilon_s = \frac{\Delta\ell}{\ell} = \frac{5\text{mm}}{30\times10^3\text{mm}}$$

$\Delta\ell$ = Anchorage slip

ℓ = length of beam

$$\Rightarrow \text{Loss of prestress} = \frac{5}{30\times10^3}\times 210\times 10^3$$

$$= 35 \text{ N/mm}^2$$

$\Rightarrow$ Percentage loss of stress

$$= \frac{35}{1000} \times 100 = 3.5\%$$

Initial stress = 1000 N/mm^2

Hence option (a) is correct.

94. The Indian Standard (IS) code used for design of prestressed concrete is

(a) IS 4326 : 2013 (b) IS 3920 : 2012

(c) IS 6512 : 2013 (d) IS 1343 : 2012

Sol: (d)

IS 4326:2013-Earthquake resistant design and construction of building.

IS 3920:1985 - Method for sampling of cotton yarn for deformation of physical characteristics.

IS 6512:2019 - Criteria for design of solid gravity dam.

IS 1343:2012 - Prestressed concrete

95. Which one of the following statements is NOT correct related to the earthquake resistant design ?

(a) Overall depth of a beam should not be greater than one-fourth of the clear span.

(b) The percentage tensile reinforcement should not exceed 2.5

(c) The reinforcement resisting positive moments at a joint face must be less than half the negative moment reinforcement.

(d) The width to depth ratio should be more than 0.30 to avoid lateral instability.

Sol: (c)

As per IS 13920 - Ductile detailing of reinforced concrete structure subjected to seismic forces :

- The overall depth of the member shall preferably be not more than 1/4 of the clear span.
- The maximum steel ratio on any face at any section shall not exceed 0.025 i.e. 2.5 percent
- The positive steel at a joint face must be at least equal to half the negative steel at that face.
- The member shall preferably have a width to depth ratio of more than 0.3

Option (c) is not as per IS code.

96. Consider the following statements related to isolation concepts in earthquake resistant design :

1. Development of shock-isolation concepts are generally applied to earthquake resistant structures.
2. The shock-isolation concept is a radical departure from current seismic design practice.
3. The successful implementation of shock-isolation concept will ensure the simplification in the design of tall reinforced concrete structures.

Which of the above statements are correct ?

(a) 1 and 2 only (b) 2 and 3 only

(c) 1 and 3 only (d) 1, 2 and 3

Sol: (b)

Shock isolation systems lower the transmission of vibration to the structure. Basically it reduces the transmissibility ratio. But this concept is generally not applied to normal structural design.

- The shock-isolation concept is a radical departure form, the current seismic design practice given in IS code.
- If this concept is successfully implemented then the upper portions of a structure can be isolated from destructive vibrations by confining the severe distortion to the base. This will simplify the design of tall structures.

So, statements 2 and 3 are correct.

97. Dozer primarily is

(a) a pushing unit (b) a lifting unit

(c) a digging unit (d) a pulling unit

Sol: (a)

Dozer or bulldozer is primarily a pushing unit.

98. The process of breaking a major project into its major and sub systems and discrete activities which can be identified easily is called

(a) Line of balance technique

(b) work break system

(c) Milestone chart technique

(d) PERT technique

Sol: (b)

99. Which one of the following statements is NOT correct in respect of stages of construction ?

(a) Conceptual stage is before study and evaluation

(b) Construction stage is after tendering stage

(c) Design stage is after tendering stage

(d) Study and evaluation stage is before design stage

Sol: (c)

Design stage is before tendering stage.

100. In a construction project, generally 50% of total project cost is attributed to

(a) Equipment cost only

(b) Material cost only

(c) Manpower cost only

(d) Material plus equipment cost

Sol: (b)

In construction projects, cost of material is generally greater than 50% of total project cost. Hence, option (b) is most appropriate answer.

101. Consider the following statements regrading the advantages of planning to the contractor :

1. The program provides a standard, by which actual work can be measured.
2. The program provides a preconceived plan for the whole job as well as for various stages of the work.

Which of the above statements is/are correct ?

(a) 1 only (b) 2 only

(c) Both 1 and 2 (d) Neither 1 nor 2

Sol: (c)

- Planning means "looking ahead", it decides in advance as what is to be done, how and where it is to be done, who will do it and how the results are to be evaluated.
- Main objective of planning is to execute the project most economically in terms of money and time.

Advantages of Planning :

(i) Advantages to the contractors :

- The contractor knows more about the job.
- It helps cost control and can prevent the loss of money and help to relieve the financial burden of the contractor.
- Supply of labour required week by week for each operation can be gauged properly if program has been drawn up earlier.
- It is a simple matter to produce various schedules from the programme.
- The programme provides a standard against which actual work can be measured.
- It lays down a preconceived plan not only for the whole job but also for the various stages in the job.

(ii) Advantages to the Architects/ Engineers

- The programme will normally be prepared by the contractor in close consultation with the architect. After the contractor has prepared a concise picture of the construction in the form of a programme and the target had been laid down for the various operations, then a draft should be submitted to the architect or engineer for construction.
- Architect/Engineer identifies the difference between two plans by their objectives and mode of execution of the operations and not by the technique adopted to prepare them.

(iii) Advantages to the Clients

- The client will know exactly how long it will take to construct the building and for what length of time his capital will be unproductive, while tied up in construction work.

Limitations of Planning :

- The effectiveness of the plan depends upon the correctness of assumptions
- Planning is expensive
- Planning delays action
- Planning encourages false sense of security

102. Arrange the stages of construction of highway projects in correct sequence :

1. Cleaning site of work or construction
2. Construction of drainage work such as culvert etc.
3. Earth work
4. Construction of road and its shoulders

Select the correct answer using the code given below :

(a) 1, 2, 3, 4 (b) 1, 3, 2, 4
(c) 2, 1, 4, 3 (d) 3, 4, 1, 2

Sol: (b)

103. Return on investment method is useful for

(a) Economic analysis of project
(b) Ecological analysis of project
(c) Financial analysis of project
(d) Commercial analysis of project

Sol: (c)

- In return on investment method, return on investment is a ratio defined as net income to the invested money for that income. This net income may be in the form of money or the value of assets.
- In economic analysis project efficiency is measured in terms of net contribution in the form of money as well as social welfare.
- Hence, (c) is the most appropriate answer.

104. To measure the performance of project against established target and identify deviation from the target are part of which one of the following management functions ?

(a) Planning (b) Directing
(c) Coordinating (d) Controlling

Sol: (d)

105. In bar chart, the length of bar shows

(a) materials required for large scale projects
(b) time required to complete that activity
(c) interdependencies of project
(d) critical activities of the project

Sol: (b)

In bar chart, the length of bar shows time required to complete the corresponding activity.

106. What is the effective length of a steel prismatic compression member for which, the translation and rotation are restricted at both the ends ?

(a) 0.80 L (b) 1.00 L
(c) 1.20 L (d) 0.65 L

Sol: (d)

Effective length of compression member for which both translation and rotation are restricted at both ends = $0.65l$.

107. By considering the net area as A_n, ultimate stress as f_u and the partial safety factor as γ_{ml}, the IS code formula for preliminary design of a tension member for design strength due to rupture (T_{dn}) of the critical section is

(a) $T_{dn} = \frac{\alpha A_n f_u}{2\gamma_{ml}}$ (b) $T_{dn} = \frac{A_n f_u}{\alpha\ \gamma_{ml}}$
(c) $T_{dn} = \frac{\gamma_{ml} A_n f_u}{\alpha}$ (d) $T_{dn} = \frac{\alpha A_n f_u}{\gamma_{ml}}$

Sol: (d)

As per clause no. 6.3.3, IS 800:2007, for preliminary design of tension member, design strength due to rupture T_{dn}.

$$= \frac{\alpha A_n f_u}{\gamma_{m1}}$$

α = 0.6 for one or two bolts
= 0.7 for three bolts
= 0.8 for four or more bolts or equivalent weld length.

108. Consider the following statements regarding the classification of beams :

1. Floor beams are often referred to as girders.
2. Joist is a beam supporting floor construction but not a major beam.
3. Rafter is a roof beam, usually supported by roof truss.

Which of the above statements are correct ?

(a) 1 and 2 only (b) 1 and 3 only
(c) 2 and 3 only (d) 1, 2 and 3

Sol: **(a)**

Joist: These are small beams supporting floor but not the major beams.

Girder: Beam supporting a number of joints or floor beams.

Rafter: A roof beam usually supporting purlins.

Purlin: A roof beam, usually supported by roof trusses.

So, statements (1) and (2) are correct.

109. A simply supported steel beam of 8 m long and subjected to a uniformly distributed load of 10 kN/m. What is the maximum bending stress (f_b) of the member at a distance of 50 mm from the neutral axis ?

[Take I = 10 × 10^5 mm^4]

(a) 400 N/mm^2 (b) 4000 N/mm^2

(c) 800 N/mm^2 (d) 8000 N/mm^2

Sol: **(b)**

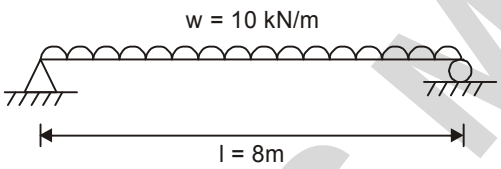

For given beam, maximum bending moment (M_{max})

$$M_{max} = \frac{wl^2}{8} = \frac{10 \times 8^2}{8} = 80\,kN-m$$

$$M_{max} = 80 * 10^6\,N-mm$$

From flexure formula,

$$\sigma_{max} = \frac{M.y_{max}}{I} = \frac{80 * 10^6 * 50}{10 * 10^5}$$

$$\sigma_{max} = 4000\ N/mm^2$$

110. Arrange the following steps involved in the design of beam-columns in a correct sequence :

1. Determine the factored loads and moments acting on the beam-column using a first-order elastic analysis.
2. Choose an initial section and calculate the necessary section properties.
3. Classify the cross section as per the IS code.
4. Find out the bending strength of the cross section about the major and minor axis of the member.

Select the correct answer using the code given below :

(a) 2, 3, 1, 4 (b) 3, 1, 2, 4

(c) 1, 2, 3, 4 (d) 4, 3, 2, 1

Sol: **(c)**

The steps given are in the correct order.

111. What is the approximate value of the tensile strength governed by yielding of the cross section of a roof truss diagonal 100×75×6 mm (f_y = 250 MPa) connected t a gusset plate by 4-mm welds as shown in figure ? [Take partial safety factor as 1.10]

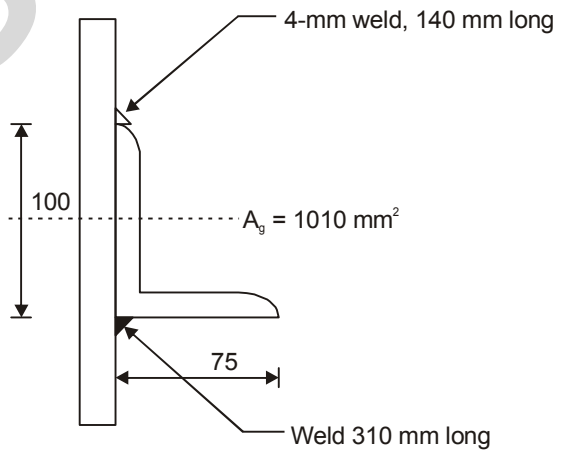

(a) 230 kN (b) 23 kN

(c) 320 kN (d) 32 kN

Sol: **(a)**

Strength governed by yielding T_{dg}

$$= \frac{f_y A_g}{\gamma_{m0}}$$

$$= \frac{250 \times 1010}{1.1} \times 10^{-3}$$

$$= 229.54\,kN \cong 230\ kN$$

112. A tension member is made up of a single angle 200 mm × 150 mm × 15 mm with a gross area of 30 cm^2. Two rows of 18 mm diameter bolts (take hole diameter = 20 mm) are used (as shown in figure (a) and (b)). What is the net area ?

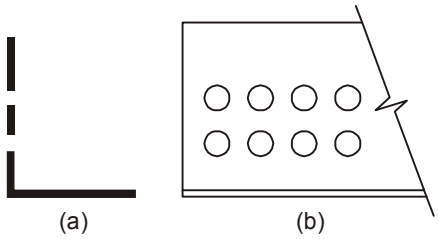

(a) 2460 mm^2 (b) 2500 mm^2

(c) 2400 mm^2 (d) 2560 mm^2

Sol: (c)

Gross area = 30 cm^2

Hole diameter = 20 mm

Area of two holes shall be deducted to obtain the net area.

$$\Rightarrow \quad \text{Net area} = A_g - 2 \times 20 \times 15$$

$$= 30 \times 10^3 - 2 \times 20 \times 15$$

$$= 2400 \text{ mm}^2$$

113. In a plate girder subjected to a bending moment of 200 kNm, the width and thickness of flange are 200 mm and 10 mm respectively. What is the economical depth of the girder by assuming the moment is resisted by the flange only?

[Take f_y = 250 MPa]

(a) 800 mm (b) 400 mm

(c) 500 mm (d) 700 mm

Sol: (b)

The depth of plate girder can be calculated by directly equating the MOR of flange to other applied bending moment .

$$\Rightarrow \quad f_y \cdot b_f \cdot t_f \cdot d = M$$

$$\Rightarrow \quad d = \frac{M}{f_y \cdot b_f \cdot t_f}$$

$$= \frac{200 \times 10^6}{250 \times 200 \times 10} = 400 \text{mm}$$

114. Which one of the following statements is NOT correct regarding gross section yielding ?

(a) Generally, a tension member without bolt holes can resist loads up to the ultimate load without failure

(b) A tension member when subjected to an ultimate load will deform considerably in the longitudinal direction

(c) A structure becomes more serviceable under the large deformation

(d) The IS code limits design strength by substituting a partial safety factor of 1.10 for failure in tension.

Sol: (c)

- As no reduction due to bolt holes, the tension member can resist load upto the ultimate load
- when subjected to ultimate load, there will be excessive deformation as the member would have already yielded.
- When large deformation is there, the structure becomes unserviceable
- Partial safety factor of 1.1 is considered in yielding.
- So, statement (c) is incorrect.

Directions for the following five (05) items:

Read the following informations and answer the five items that follow :

A singly reinforced concrete beam with an effective span of 4 m has a rectangular cross section with a width of 300 mm and an overall depth of 550 mm. The beam is reinforced with steel of Fe-415 grade of area 250 mm^2 at lane effective depth of 500 mm. The self-weight with dead load of the beam is 4 kN/m. Consider M-15 grade concrete and $\sigma_{cbc} = 5\text{MPa}$; $\sigma_{st} = 230\text{MPa}$.

115. What is the bending moment due to dead load ?

(a) 8000 Nm (b) 80 kNm

(c) 32 kNm (d) 3200 Nm

Sol: (a)

Question number 115 to 119 based on working stress method.

Given data,

Effective span (ℓ_{eff}) = 4.0 m

Width (b) = 300 mm

Overall depth (D) = 550 mm

Effective depth (d) = 500 mm

Self weight + dead load = 4 kN/m

Grade of steel = Fe-415

Grade of concrete = M-15

$\sigma_{cbc} = 5\text{MPa}$

$\sigma_{st} = 230\text{MPa}$

Area of steel in tension = 250 mm^2

Bending moment due to dead load

$$= \frac{wl_{eff}^2}{8} = \frac{4\times 4^2}{8} = 8 \text{ kNm} = 8000 \text{ Nm.}$$

Hence, option (a) is correct.

Note : The beam is assumed to be simply supported and maximum bending moment is reported.

116. What is the modular ratio ?

(a) 28/3 (b) 40/3

(c) 56/3 (d) 86/3

Sol: **(c)**

$$\text{The modular ratio (m)} = \frac{280}{3\sigma_{cbc}}$$

$$= \frac{280}{3\times 5} = \frac{56}{3}$$

Hence, option (c) is correct.

117. What is the depth of critical neutral axis ?

(a) 134.33 mm (b) 124.33 mm

(c) 154.33 mm (d) 144.33 mm

Sol: **(d)**

Depth of critical neutral axis or balance depth of neutral axis.

$$x_b = \frac{d}{1+\frac{3\sigma_{st}}{280}} = \frac{500}{1+\frac{3\times 230}{28}}$$

$$= 144.33 \text{ mm}$$

Hence, option (d) is correct.

118. What is the moment of resistance of the section if the actual depth of neuter axis is 100 mm ?

(a) 36.83 kNm (b) 26.83 kNm

(c) 16.83 kNm (d) 46.83 kNm

Sol: **(b)**

The actual depth of neutral axis is given as 100 mm.

$$x < x_b$$

$\Rightarrow$ The section is under-reinforced and the stress in steel can se taken as σ_{st}.

$$\Rightarrow \text{MOR} = \sigma_{st}A_{st}\left(d-\frac{x}{3}\right)$$

$$= 230\times 250\times\left(500-\frac{100}{3}\right)\times 10^{-6}$$

$$= 26.83 \text{ kNm}$$

119. What is the permissible live load on the beam ?

(a) 13.43 kN/m (b) 9.43 kN/m

(c) 8.43 kN/m (d) 6.43 kN/m

Sol: **(b)**

Moment of resistance of the section = 26.83 kNm

Bending moment due to dead load = 8 kNm

Assume permissible live load as w.

Maximum bending moment due to live load + maximum sending moment. due to dead load $\leq$ MOR

$$\Rightarrow \frac{wl^2}{8}+8 \leq 26.83$$

$$\Rightarrow w \leq \frac{(26.83-8)\times 8}{4^2}$$

$$\Rightarrow w \leq 9.42 \text{ kN/m}$$

Option (b) is the closest one.

120. A section is said to be under-reinforced when

(a) the depth of actual neutral axis is greater than the depth of critical neutral axis.

(b) the depth of actual neutral axis is less than the depth of critical neutral axis.

(c) the depth of actual neutral axis is equal to the depth of critical neutral axis

(d) it is not related to the depth of neutral axis.

Sol: **(b)**

- A section is said to be under-reinforced when the depth of actual neutral axis is less than the depth of critical neutral axis.
- When the depth of actual neutral axis is

greater than the depth of critical neutral axis, the section is called over reinforced section.

- When the depth of actual neutral axis is equal to the depth of critical neutral axis, the section is called balanced section.

121. The value of Poisson's ratio for Brass material is

(a) 0.14 (b) 0.24

(c) 0.34 (d) 0.44

Sol: (c)

$$\mu_{brass} \approx \mu_{Al} \approx 0.34$$

122. A hole is to be punched through a steel plate of 8 mm thickness. What is the least diameter of hole which can be punched, fi the steel punch can be worked to a compressive stress of 800 N/mm^2 an the ultimate shear strength is 300 N/mm^2 ?

(a) 1.2 mm (b) 12 mm

(c) 21 mm (d) 2.1 mm

Sol: (b)

To punch the hole in steel plate, shear stress developed around the surface for hole due to load application must be larger than its shear strength.

Assuming uniform stress distribution:

$$\tau_{avg} = \tau_{per}$$

$$\Rightarrow \frac{\text{load}}{\text{surface area}} = 300\,\text{N/mm}^2$$

Compressive load = compressive stress×area

$$= 800 \times \frac{\pi d^2}{4} = 200\,\pi d^2$$

Surface area = $\pi d \times$ thickness $= 8\pi d$

Hence,

$$\frac{200\,\pi d^2}{8\,\pi d} = 300$$

$$\Rightarrow \quad d = 12 \text{ mm}$$

123. Consider the following statements regarding the strain displacement. :

1. The strain depends on the displacement of point within the body.
2. The strain at points within the body does not depend on the relative displacements of various points within the body.

Which of the above statements is/are correct ?

(a) Both 1 and 2 (b) 1 only

(c) 2 only (d) Neither 1 nor 2

Sol: (d)

Strain in a body depends on relative displacements of the points within the body.

Hence neither statement-1 nor statement-2 is correct.

124. A flat bar 10 mm thick and 100 mm wide is subjected to a pull of 100 kN. One side of the bar is polished and lines are ruled on it to form a square of 50 mm side, one diagonal of the square being along the middle line of the polished side. What is the change in the sides ?

[Take E-200 kN/mm^2 and Poisson's ratio is 0.30]

(a) 0.0875 mm (increases)

(b) 0.00875 mm (decreases)

(c) 0.00875 mm (increases)

(d) 0.0875 mm (decreases)

Sol: (c)

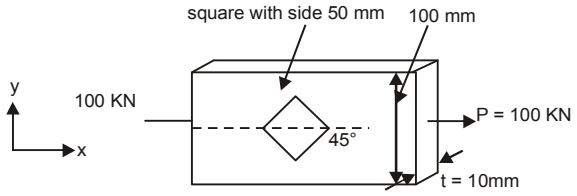

Due to axial load, P

$$\epsilon_x = \frac{P}{AE}, \epsilon_y = -\frac{\mu P}{AE}$$

$$\epsilon_x = \frac{100}{100 \times 10 \times 200} = 5 \times 10^{-4}$$

$$\epsilon_y = 1.5 \times 10^{-4}$$

- Considering the square separately :

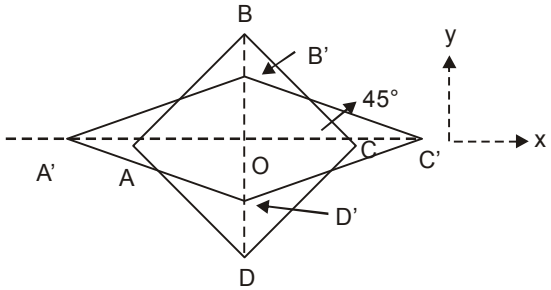

UPPSC-AE 2021

Online Test Series

CE ME EE

Valid till **20 April 2022**

- Test papers as per UPPSC-AE exam pattern & syllabus
- Thoroughly researched test papers by subject experts
- Determine preparation level in real exam environment
- Comprehensive analysis and feedback after each test

(Tests are active) **6 Tests**

3 Paper-1 = (Tech + Hindi)
3 Paper-2 = (Tech + General Studies)

+

6 Tests Starts from 06th March

3 Paper-1 = (Tech + Hindi)
3 Paper-2 = (Tech + General Studies)

= Total **12** Tests

IES MASTER .org
Institute for Engineers (IES/GATE/PSUs)

F-126, Katwaria Sarai, New Delhi-110016 | Call +91 801 00 09955
Email: info@iesmaster.org

- $AO = BO = \frac{50}{\sqrt{2}}$ and AB = 50 mm
- A'B'C'D' is new shape of original square after deformation.

In triangle A'B'O

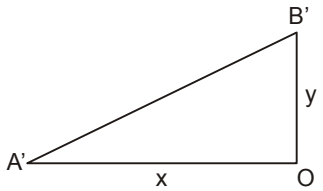

$$A'O = x = (1+\epsilon_x)AO$$

$$= (1+5\times10^{-4})\frac{50}{\sqrt{2}}mm$$

$$B'O = (1+\epsilon_y) = (1-1.5\times10^{-4})\times\frac{50}{\sqrt{2}}$$

$$A'B' = \sqrt{(A'O)^2+(B'O)^2} = 50.00875mm$$

Change in the side of square = $A'B' - AB$
= 0.00875 mm (increase)

125. In a tensile test carried out in the laboratory on a steel specimen for 5 minutes. The strain value noted at that time was 0.30. What is the average strain rate of that steel specimen ?

(a) 0.01/second (b) 0.001/minute
(c) 0.001/second (d) 0.01/minute

Sol: (c)

$$\text{Average strain rate} = \frac{\epsilon_f - \epsilon_0}{\Delta t}$$

$$= \frac{0.3-0}{5*60} = 0.001/\text{second}$$

126. Maximum principal strain theory of elastic failure is also known as

(a) Guest's Theory
(b) Rankine's Theory
(c) Haigh's Theory
(d) Saint Venant's Theory

Sol: (d)

Maximum principal strain theory is also known as st. Venant's theory.

127. Which one of the following is the limitation of the maximum strain energy theory ?

(a) The theory doesn't apply to the ductile materials
(b) It can only be applicable for the materials under the hydrostatic pressure
(c) It cannot be applied for materials under the hydrostatic pressure
(d) The theory does not give accurate results in case of torsion test.

Sol: (d)

Maximum strain energy theory is suitable for ductile materials, but it does not give accurate results in case of torsion test for ductile materials.

Hence, option (d) is the correct answer.

Note : None of the failure theories is suitable for hydrostatic stress condition.

128. What are the values of maximum shear stress (τ_{max}) and the angel of twist (θ) respectively for an equivalent triangle with side a and twisting moment M_t ?

[Take the modulus of rigidity is G]

(a) $\frac{20M_t}{a^3}$ and $\frac{46M_t}{a^4G}$ (b) $\frac{20M_t}{a^2}$ and $\frac{26M_t}{a^4G}$
(c) $\frac{46M_t}{a^3}$ and $\frac{20M_t}{a^4G}$ (d) $\frac{20M_t}{a^4}$ and $\frac{46M_t}{a^3G}$

Sol: (a)

For a prismatic bar with equilateral triangular cross-section, subjected to a twisting moment (M_t) at both ends

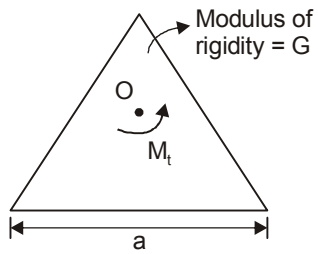

$$\tau_{max} = \frac{20\,M_t}{a^3}$$

$$\text{Angle of twist } (\theta) = \frac{80M_t}{\sqrt{3}\,G\cdot a^4} \cong \frac{46M_t}{Gd^4}$$

129. A cantilever beam of length L is loaded by a transverse load varying linearly from w_0 at fixed end and zero at free end. What is the shear at L/2 of the beam ?

(a) $w_0L/4$ (b) $w_0L^2/8$

(c) $w_0L^2/4$ (d) $w_0L/8$

Sol: (d)

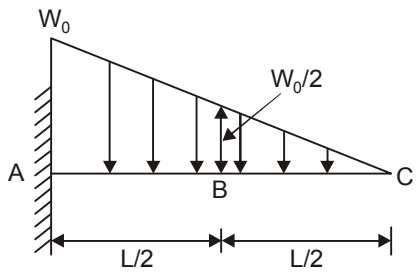

Shear force at L/2,

$$V_B = \frac{1}{2} * \frac{W_0}{2} * \frac{L}{2} = \frac{W_0L}{8}$$

130. Two of the principal stress at a point are 130 MPa and 90 MPa. What is the safe range of the third principal stress at the point by using maximum shear stress theory ?

[Take the failure stress in tension as f_y = 210 N/mm^2]

(a) $-80 \text{ MPa} \le \sigma \le 300 \text{ MPa}$

(b) $-155 \text{ MPa} \le \sigma \le 210 \text{ MPa}$

(c) $-112 \text{ MPa} \le \sigma \le 222 \text{ MPa}$

(d) $-210 \text{ MPa} \le \sigma \le 210 \text{MPa}$

Sol: (a)

$\sigma_1 = 130\text{MPa}, \sigma_2 = 90\text{MPa}, \sigma_3 = ?$

$$\tau_{max,\,abs} = \text{Max}\left\{\frac{|\sigma_1-\sigma_2|}{2}, \frac{|\sigma_2-\sigma_3|}{2}, \frac{|\sigma_3-\sigma_1|}{2}\right\}$$

As per maximum shear stress theory, for no failure.

$$\tau_{max,\,abs} \le \frac{f_y}{2}$$

Case-I :

When $\tau_{max,\,abs} = \dfrac{|\sigma_2-\sigma_3|}{2}$

$$\frac{|90-\sigma_3|}{2} \le \frac{210}{2}$$

$$\Rightarrow \quad |90-\sigma_3| \le 210$$

Sub case (a)

$$90-\sigma_3 \le 210$$

$$\Rightarrow \quad \sigma_3 \ge -120 \text{ MPa} \quad ..(i)$$

Sub case (b)

$$-(90-\sigma_3) \le +210$$

$$\sigma_3 \le 210 + 90$$

$$\Rightarrow \quad \sigma_3 \le 300 \text{ MPa} \quad ...(ii)$$

Conclusion of case I :

For no failure $-120 \text{ MPa} \le \sigma_3 \le 300\text{MPa}$

Case-II :

When $\tau_{max,abs} = \dfrac{|\sigma_3-\sigma_1|}{2}$

$$\frac{|\sigma_3-130|}{2} \le \frac{210}{2}$$

$$\Rightarrow \quad |\sigma_3-130| \le 210$$

Sub Case : (c)

$$\sigma_3-130 \le 210$$

$$\Rightarrow \quad \sigma_3 \le 340 \text{ MPa} \quad ....(iii)$$

Sub Case : (d)

$$\Rightarrow \quad -(\sigma_3-130) \le 210$$

$$\Rightarrow \quad \sigma_3 \ge -80 \text{ MPa} \quad ...(iv)$$

Conclusion of case-II for no failure

$-80\text{MPa} \le \sigma_3 \le 340\text{MPa}$

Conclusion of all the cases,

For no failure $\rightarrow$ $\boxed{-80 \text{ MPa} \le \sigma \le 300\text{MPa}}$

131. A close-coiled heliacal spring is subjected to an axial pull of W. The spring is made out of d mm diameter rod, and has n complete coils, each of radius R and modulus of rigidity as N then the deflection under the pull is

(a) $\delta = \dfrac{16\,WR^3n}{Nd^4}$ (b) $\delta = \dfrac{32\,WR^3n}{Nd^4}$

(c) $\delta = \dfrac{64\,WR^3n}{Nd^4}$ (d) $\delta = \dfrac{64\,WR^2n}{Nd^3}$

Sol: **(c)**

$$\delta = \frac{64PR^3n}{Gd^4}$$

132. A steel wire of cross-sectional area 100 mm^2 and length of 100 m is used to lift a weight of 2.5 kN at its lowest end. What is the total elongation of the wire if the mass density of the wire is 8 kg/m^3 ?

[Take E = 200 GPa and acceleration due to gravity is 10 m/s^2]

(a) 14.5 mm (b) 29 mm

(c) 7.5 mm (d) 36.5 mm

Sol: **(*)**

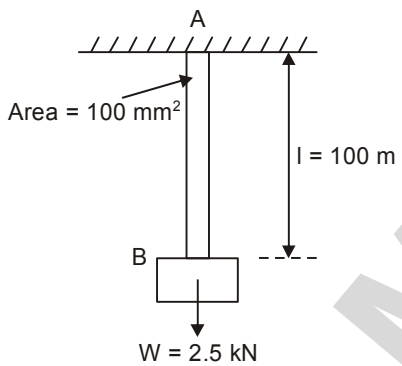

Given ;

X-sectional area (A) = 100 mm^2

length = 100 mm

E = 200 GPa

g = 10 m/s^2

ρ = 8 Kg/m^3

$$\delta_{total} = \delta_w + \delta_{self\ weight}$$

$$= \frac{wl}{AE} + \frac{\lambda l^2}{2E} \quad [\gamma = \rho g = 80\ N/m^3]$$

$$= \frac{2.5\times10^3\times100\times10^3}{100\times200\times10^3} + \frac{80\times10^{-9}\times(100\times10^3)^2}{2\times200\times10^3}$$

$\Rightarrow$ δ_{total} = 12.502 mm

133. For non-homogeneous clays, the coefficient of permeability in (mm/s) should be ranges between

(a) 10^{-1} to 10^{-2} (b) 10^{-2} to 10^{-3}

(c) 10^{-3} to 10^{-4} (d) 10^{-4} to 10^{-6}

Sol: **(d)**

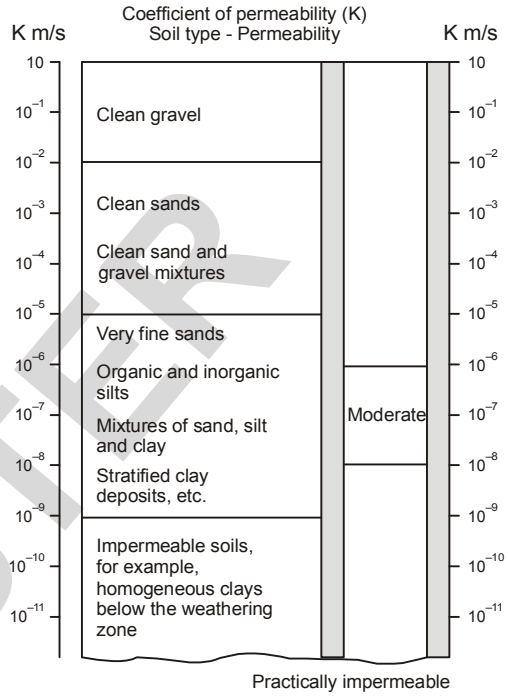

Typical values of the coefficient of permeability

Soil description	Coefficient of permeability (mm/sec)	Degree of permeability
Coarse gravel	Greater than 1	High
Fine gravel -fine sand	1 to 10^{-2}	Medium
Silt-sand admixtures, loose silt, rock flour, and loess	10^{-2} to 10^{-4}	Low
Dense silt, clay-silt admixtures, non-homogeneous clays	10^{-4} to 10^{-6}	Very Low
Homogeneous clays	Less than 10^{-6}	Almost impervious

134. Large parts of northern India lying north of Vindhya-Satpura range in the Indo-Gangetic and Brahmaputra flood plains are covered by

(a) the colluvial soils

(b) the aeolian soils

(c) the alluvial soils

(d) the talus soils

Sol: **(c)**

Alluvial Soil: The soil which is formed by the continuous deposition of silt from the water flowing through a given area, is called alluvial soil.

In pre-historic periods, the area bounded by Indo-Gangetic plain, i.e., the area starting from Himalayas to Vindhya mountains, used to be in the form of depressions with water flowing over it. With the passage of time, it was filled up with loosely filled fine silt particles, thereby forming alluvial soil.

135. The maximum test load on a working pile should not exceed

(a) 250 kN

(b) 180 kN

(c) two and a half times the design load

(d) one and a half times the design load

Sol: **(d)**

 # For Vertical loading on single pile loading shall be continued till one of the following takes place:

(a) In case of initial load test:

(1) Applied load reaches 2.5 times the safe estimated load; or

(2) Maximum settlement of pile exceeds a value of 10 percent of pile diameter in case of uniform diameter piles and 7.5 percent of bulb diameter in case of under-reamed piles.

(b) In case of routine load test:

(1) Applied load reaches 1.5 times the working load; or

(2) Maximum settlement of pile exceed a value of 12 mm for piles diameter up to and including 600 mm and 18 mm or maximum of 2 percent of pile diameter whichever is less for piles of diameter more than 600 mm.

136. Which one of the following is the amount of time by which the start of an activity may be delayed without delaying the start of a following activity ?

(a) Total float (b) Interference float

(c) Independent float (d) Free float

Sol: **(d)**

Total float: Total float of an activity is the amount of time by which the start of the activity may be delayed without causing a delay in completion of the project.

Free float: Free float is the amount of time by which the start of an activity may be delayed without delaying the start of a following activity.

Independent float: Independent float is the amount of time by which the start of an activity may be delayed without affecting the preceding or the following activity.

Interface float: It is defined as the difference in total float and free float.

137. Which of the following is/are consumed time and resources ?

(a) Event only

(b) Activity (other than dummy) only

(c) Dummy activity only

(d) Both event and activity (other than dummy)

Sol: **(b)**

138. Construction quality can NOT be directly affected by

(a) whether a clear set of designs and drawings is available

(b) whether a clear, well-laid-out and unambiguous set of specifications is available

(c) whether a clearly defined time duration of project

(d) whether there has been usage of proper materials, workers and equipments during the construction processes

Sol: **(c)**

Factors given in options (a), (b) and (d) clearly affects the quality of construction whereas if project duration is not well defined, it may or may not affect the quality of construction depending on various factors.

IES MASTER

Institute for Engineers (IES/GATE/PSUs)

OUR STAR PERFORMERS - UPSC ESE 2020

"Consistent Quality, Outstanding Results"

AIR	Branch	Name
1	CE	Gaurav Kumar Verma ESE-2020
2	CE	Prashant Singh ESE-2020
3	CE	Kuldeep ESE-2020
4	CE	Anish Bagga ESE-2020
5	CE	Pavitra Goyal ESE-2020
3	ME	Suraj Kumar Shaw ESE-2020
1	EE	Shashank Gaur ESE-2020
2	EE	Abhishek Singh ESE-2020
3	E&T	Rahul Naredi ESE-2020

CIVIL ENGINEERING

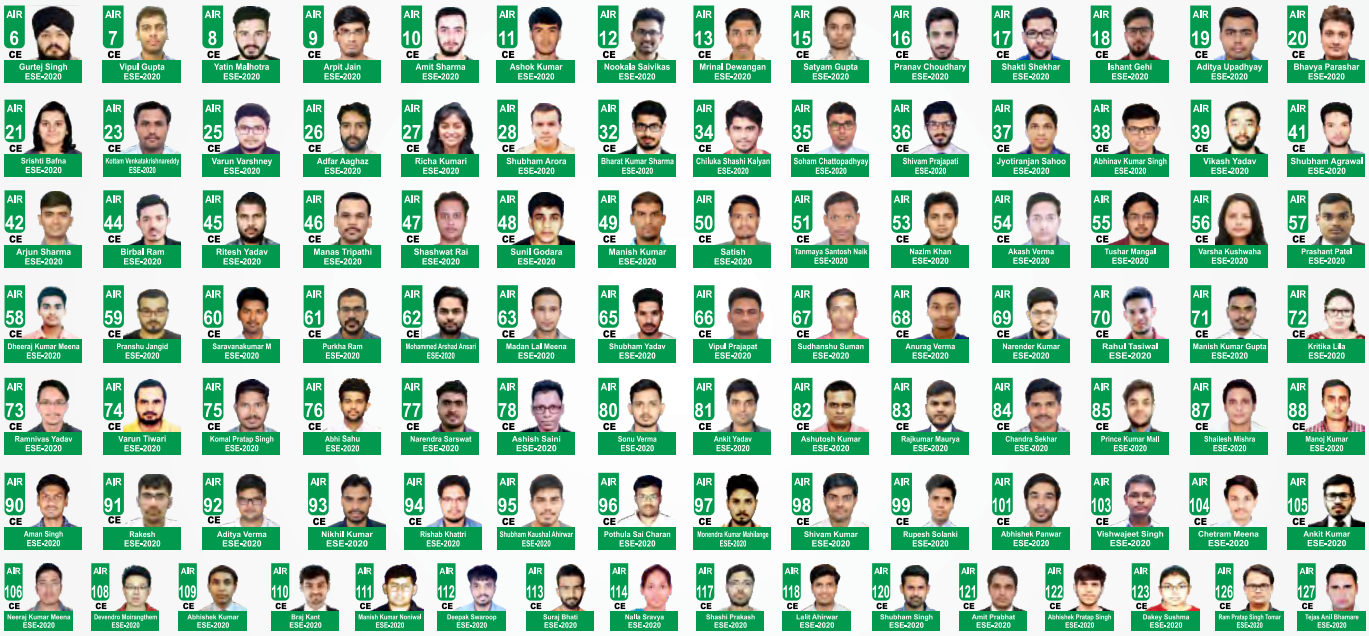

AIR	Branch	Name
6	CE	Gurtej Singh ESE-2020
7	CE	Vipul Gupta ESE-2020
8	CE	Yatin Malhotra ESE-2020
9	CE	Arpit Jain ESE-2020
10	CE	Amit Sharma ESE-2020
11	CE	Ashok Kumar ESE-2020
12	CE	Nookala Saivikas ESE-2020
13	CE	Mrinal Dewangan ESE-2020
15	CE	Satyam Gupta ESE-2020
16	CE	Pranav Choudhary ESE-2020
17	CE	Shakti Shekhar ESE-2020
18	CE	Ishant Gehi ESE-2020
19	CE	Aditya Upadhyay ESE-2020
20	CE	Bhavya Parashar ESE-2020
21	CE	Srishti Bafna ESE-2020
23	CE	Kottam Venkatakrishnareddy ESE-2020
25	CE	Varun Varshney ESE-2020
26	CE	Adfar Aaghaz ESE-2020
27	CE	Richa Kumari ESE-2020
28	CE	Shubham Arora ESE-2020
32	CE	Bharat Kumar Sharma ESE-2020
34	CE	Chiluka Shashi Kalyan ESE-2020
35	CE	Soham Chattopadhyay ESE-2020
36	CE	Shivam Prajapati ESE-2020
37	CE	Jyotiranjan Sahoo ESE-2020
38	CE	Abhinav Kumar Singh ESE-2020
39	CE	Vikash Yadav ESE-2020
41	CE	Shubham Agrawal ESE-2020
42	CE	Arjun Sharma ESE-2020
44	CE	Birbal Ram ESE-2020
45	CE	Ritesh Yadav ESE-2020
46	CE	Manas Tripathi ESE-2020
47	CE	Shashwat Rai ESE-2020
48	CE	Sunil Godara ESE-2020
49	CE	Manish Kumar ESE-2020
50	CE	Satish ESE-2020
51	CE	Tanmaya Santosh Naik ESE-2020
53	CE	Nazim Khan ESE-2020
54	CE	Akash Verma ESE-2020
55	CE	Tushar Mangal ESE-2020
56	CE	Varsha Kushwaha ESE-2020
57	CE	Prashant Patel ESE-2020
58	CE	Dheeraj Kumar Meena ESE-2020
59	CE	Pranshu Jangid ESE-2020
60	CE	Saravanakumar M ESE-2020
61	CE	Purkha Ram ESE-2020
62	CE	Mohammed Arshad Ansari ESE-2020
63	CE	Madan Lal Meena ESE-2020
65	CE	Shubham Yadav ESE-2020
66	CE	Vipul Prajapat ESE-2020
67	CE	Sudhanshu Suman ESE-2020
68	CE	Anurag Verma ESE-2020
69	CE	Narender Kumar ESE-2020
70	CE	Rahul Tasiwal ESE-2020
71	CE	Manish Kumar Gupta ESE-2020
72	CE	Kritika Lila ESE-2020
73	CE	Ramnivas Yadav ESE-2020
74	CE	Varun Tiwari ESE-2020
75	CE	Komal Pratap Singh ESE-2020
76	CE	Abhi Sahu ESE-2020
77	CE	Narendra Sarswat ESE-2020
78	CE	Ashish Saini ESE-2020
80	CE	Sonu Verma ESE-2020
81	CE	Ankit Yadav ESE-2020
82	CE	Ashutosh Kumar ESE-2020
83	CE	Rajkumar Maurya ESE-2020
84	CE	Chandra Sekhar ESE-2020
85	CE	Prince Kumar Mall ESE-2020
87	CE	Shailesh Mishra ESE-2020
88	CE	Manoj Kumar ESE-2020
90	CE	Aman Singh ESE-2020
91	CE	Rakesh ESE-2020
92	CE	Aditya Verma ESE-2020
93	CE	Nikhil Kumar ESE-2020
94	CE	Rishab Khattri ESE-2020
95	CE	Shubham Kaushal Ahirwar ESE-2020
96	CE	Pothula Sai Charan ESE-2020
97	CE	Manendra Kumar Mahilange ESE-2020
98	CE	Shivam Kumar ESE-2020
99	CE	Rupesh Solanki ESE-2020
101	CE	Abhishek Panwar ESE-2020
103	CE	Vishwajeet Singh ESE-2020
104	CE	Chetram Meena ESE-2020
105	CE	Ankit Kumar ESE-2020
106	CE	Neeraj Kumar Meena ESE-2020
108	CE	Devendra Maisnamthem ESE-2020
109	CE	Abhishek Kumar ESE-2020
110	CE	Braj Kant ESE-2020
111	CE	Manish Kumar Nonilwal ESE-2020
112	CE	Deepak Swaroop ESE-2020
113	CE	Suraj Bhati ESE-2020
114	CE	Nalla Sreeya ESE-2020
117	CE	Shashi Prakash ESE-2020
118	CE	Lalit Ahirwar ESE-2020
120	CE	Shubham Singh ESE-2020
121	CE	Amit Prabhat ESE-2020
122	CE	Abhishek Pratap Singh ESE-2020
123	CE	Dakey Sushma ESE-2020
126	CE	Ram Pratap Singh Tomar ESE-2020
127	CE	Tejas Anil Bhamare ESE-2020

MECHANICAL ENGINEERING

AIR	Branch	Name
4	ME	Shubham Bothra ESE-2020
5	ME	Kamlesh Parwar ESE-2020
6	ME	Mohammad Zuhaib ESE-2020
8	ME	Vayuru Sakrutra Reddy ESE-2020
9	ME	Ganesh Kumar Adigaur ESE-2020
13	ME	Arpit Jain ESE-2020
14	ME	Nimesh Chandra ESE-2020
15	ME	Chatuparthi Surya Teja ESE-2020
16	ME	Dagdu Ajinkya Radhakisan ESE-2020
24	ME	Kshitij Gaurav Verma ESE-2020
25	ME	Swapndeep Chouhan ESE-2020
28	ME	Sarpate Akshay Devidas ESE-2020
29	ME	Hemant Kumar Meena ESE-2020
32	ME	Sanidhya Sewra ESE-2020
35	ME	Rishabh Kumar Meena ESE-2020
36	ME	Lokraj Meena ESE-2020

ELECTRICAL ENGINEERING

AIR	Branch	Name
6	EE	Vishwa Simhan S B ESE-2020
7	EE	Dinesh Kumar Singh ESE-2020
9	EE	Akshay Kumar Tanneer ESE-2020
10	EE	Rajat Dixit ESE-2020
12	EE	Surendra Prajapat ESE-2020
13	EE	Gyan Chand ESE-2020
19	EE	Prem Sukh Nan ESE-2020
20	EE	Abhishek Jangir ESE-2020
23	EE	Saroj Kumari ESE-2020
24	EE	Darshit Kataria ESE-2020
27	EE	Shashank Tiwari ESE-2020
31	EE	Prithvi Kota ESE-2020
35	EE	Nikunj Jindal ESE-2020
38	EE	Naveen Kumar ESE-2020
48	EE	Prateek Jadaun ESE-2020
51	EE	Piyush Meena ESE-2020
57	EE	Keshav Singh ESE-2020
58	EE	Kanika Meena ESE-2020

ELECTRONICS & TELECOMMUNICATION ENGINEERING

AIR	Branch	Name
5	E&T	Manoj Kumar ESE-2020
9	E&T	Chhavi Jain ESE-2020
10	E&T	Lakshmeet Kanat Jaiswal ESE-2020
14	E&T	Arti Singh ESE-2020
15	E&T	Priyamvada ESE-2020
16	E&T	Shantanu Sharma ESE-2020

139. Marble is an example of

(a) Metamorphic Rock (b) Sedimentary Rock

(c) Igneous Rock (d) Argillaceous Rock

Sol: **(a)**

Marble is an example of metamorphic rock, which form from limestone and marl.

140. Which one of the following is caused by the crushing of fibres running transversely during the growth of the tree ?

(a) Shake (b) Knot

(c) Upset (d) Rind gall

Sol: **(c)**

Upset is caused by crushing of fibres due to improper felling of tree in its young age to fast blowing wind.

141. Which one of the following statements is NOT correct for Aluminium ?

(a) It is less ductile than copper

(b) It is harder than tin

(c) It can be soldered

(d) It can be welded

Sol: **(c)**

Aluminimum is silver white in colour with a brittle metallic lustre on freshly broken surface. It is malleable, less ductile than copper but excels zinc, tin, and lead. Aluminiumis harder than tin. Aluminium is very light, soft, strong and durable, has low thermal conductivity but is a good conductor of electricity. Aluminium can be riveted and welded, but cannot be soldered.

142. Which one of the following limes is the quick-lime coming out of kilns ?

(a) Lump lime (b) Fat lime

(c) Hydraulic lime (d) Hydrated lime

Sol: **(a)**

143. Which one of the following generally recommended for small jobs only?

(a) Volume batching (b) Weigh batching

(c) Machine mixing (d) Non-tilting mixer

Sol: **(a)**

Volume batching is generally recommended for small jobs only

144. Consider the following statements regarding the transit mixer:

1. Their function is mainly to keep the mix in an agitated condition.
2. These mixers in addition to the outer spirals have four inner spirals.
3. A number of special nozzles provided on the lower side of inner mixing spirals, precisely and uniformly spray water on the mix under pressure along the entire length of the drum.

Which of the above statements are correct ?

(a) 1 and 2 only (b) 2 and 3 only

(c) 1 and 3 only (d) 1, 2 and 3

Sol: **(c)**

Their function is mainly to keep the mix in an agitated condition. With the development of twin fin process mixer the transit mixers have become more efficient. These mixers in addition to the outer spirals have two opposed inner spirals. The outer spirals convey the mix materials towards the bottom of the drum while the opposed mixing spirals push the mix towards the feed opening.

145. In the acceptance criteria for concrete in accordance with IS 456:2000, the variation in strength of individual specimen should not be more than

(a) ± 30% of the average

(b) ± 25% of the average

(c) ± 15% of the average

(d) ± 20% of the average

Sol: **(c)**

As per IS:456-2000, clause no. 15.4, the test results of the sample shall be the average of the strength of three specimens. The individual variation should not be more than ±15% of the average.

146. Which one of the following is NOT required for concrete mix design ?

(a) Maximum free water-cement ratio by weight
(b) Degree of workability of concrete
(c) Initial setting time of cement
(d) Maximum/minimum cement content

Sol: **(c)**

147. Which one of the following statements is NOT correct in respect of wet process of manufacturing of cement ?

(a) It required longer kilns
(b) It produces more homogenous mix
(c) It is less responsive to a variable clinker demand
(d) It is high cost of excavating and grinding raw materials

Sol: **(d)**

Generally wet process is preferred for soft material, therefore, it have low cost of excavating and grinding raw materials.

148. The compaction factor test of cement concrete is performed to determine its

(a) porosity
(b) percentage voids
(c) strength
(d) workability

Sol: **(d)**

To determine the workability of concrete we have to use slump test, Vee-Bee test, compaction factor test and flow table test.

149. Which one of the following is obtained by burning kankar or clayey lime stones ?

(a) Hydraulic lime
(b) Quick lime
(c) Fat lime
(d) White lime

Sol: **(a)**

Slaked fat lime is used to prepare mortar for plastering, while hydraulic lime is used for masonry construction.

150. Slaked fat lime is used to prepare mortar for

(a) plastering
(b) masonry construction
(c) pointing
(d) reinforced brickwork

Sol: **(a)**