IES MASTER

Institute for Engineers (IES/GATE/PSUs)

ESE 2022 Prelims Exam

Paper - II

MECHANICAL ENGINEERING

Detailed Solution

(SET-B)

Office Address

DELHI: F-126, Katwaria Sarai, New Delhi - 110 016

Ph: 011-41013406, Mobile: 8130909220, 9711853908

Web: www.iesmaster.org | E-mail: info@iesmaster.org

1. Consider the following statements regarding microprocessors and micro-controllers:

1. A microcontroller is a single, very large-scale integrated chip that contains programmabel electronic components.
2. Address bus carries the signals relating to control actions.
3. A microcomputer consists of a central processing unit, I/O interface and a memory block.

Which of the above statements are correct?

(a) 1 and 2 only (b) 2 and 3only
(c) 1 and 3 only (d) 1, 2 and 3

Sol: (c)

Systems using microprocessors basically have three parts: a CPU to recognise and carry out program instructions, input and output interfaces to handle communications between the microprocessors and the outside world and memory to hold the program instructions and data. Microprocessors which have memory and various input/output arrangements all on the same chip are called microcontrollers.

Three forms of buses in microprocessor

(i) **Data bus:** The data associated with the processing function of the CPU is carried by the data bus.

(ii) **Address bus:** The address bus carries signals which indicate where data is to be found and so the selection of certain memory locations or input or output ports.

(iii) **Control Bus:** The signal relating to control actions are carried by the control bus.

2. Consider the following statements regarding microprocessor instructions:

1. Compare instruction reads the contents of a particular memory location and copied to a specific register in the processor.
2. Jumps instruction changes the sequence in which the program is being carried out.
3. Decrement instruction subtracts 1 from the contents of a specified location

Which of the above statements are correct?

(a) 1 and 2 only (b) 2 and 3 only
(c) 1 and 3 only (d) 1, 2 and 3

Sol: (b)

- **Load:** This instruction reads the contents of a specified memory location and copies it to a specified register location in the central processing unit (CPU)
- **Store:** This instruction copies the current contents of a specified register into a specified memory location.
- **Move:** This instructions is used to move data into a register or copy data from one register to another.
- **Clear:** This instruction resets all bits to zero.
- **Add:** This instruction adds a number to the data in some register.
- **Decrement:** This instruction subtracts 1 from the contents of a specified location.
- **Increment:** This instruction adds 1 to the contents of a specified location.
- **Compare:** This instruction indicates whether the contents of a register are greater than, less than or the ame as the contents of a specified memory location. The result appears in the status register as a flag.
- **Logical:**

  AND This instruction carries out the logical AND operation with the contents of a specified memory location and the data in some register
- **OR:** This instruction carries out the logical OR operation with the contents of a specified memory location and the data in some register, bit by bit.
- **Exclusive-OR:** This instruction carries out the logical exclusive or operation with the contents of a specified memory location and the data in some register.
- **Logical shift (Left or right):** Logical shift instructions involve moving the pattern of bits in the register one place to the left or right moving a_0 into the end of the number.

- **Arithmetic shift (left or right):** Arithmetic shift instructions involve moving the pattern of bits in the register one place to the left or right but preserve the sign bit at the left end of the number.
- **Rotate (left or right):** Rotate instructions involve moving the pattern of bits in the register one place to the left or right and the bit that spills out is written back into the other end.

Jump or branch: This instruction changes the sequence in which the programs steps are carried out.

3. Which one of the following statements is correct regarding characteristics parameters used in transducers?

(a) Span is the deviation of the true value from the desired value

(b) Precision is defined as the degree of exactness for which an instrument is designed or intended to perform

(c) Sensitivity is the difference in the output for a given input when the value is approached from the opposite direction

(d) Hysteresis of an instrument is defining as the ratio of the magnitude of the output signal to the magnitude of the input signal

Sol: (b)

- **Range and span:** The range of a transducer defines the limits between which the input can vary. The span is the maximum value of the input minus the minimum value. Thus, for example, a load cell for the measurement of forces might have a range of 0 to 50 kN and a span of 50 kN.
- **Error:** Error is the difference between the result of the measurement and the true value of the quantity being measured.
- **Accuracy:** Accuracy is the extent to which the value indicated by a measurement system might be wrong. It is thus the summation of all the possible errors that are likely to occur, as well as the accuracy to which the transducer has been calibrated.
- **Sensitivity:** The sensitivity is the relationship indicating how much output you get per unit input, i.e. output/input.
- **Hysteresis error:** Transducers can give different outputs from the same value of quantity being measured according to whether that value has been reached by a continuously increasing change or a continuously decreasing change. This effect is called hysteresis.

4. Consider the following statements regarding dynamic quantities in sensors and transducers:

1. The maximum amount by which the moving parts move beyond the steady state is known as over shoot.
2. An output whose magnitude does not repeat with time is known as transient.
3. An output whose magnitude has a definite repeating time cycle is called steady state periodic.

Which of the above statements are correct?

(a) 1 and 2 only (b) 2 and 3 only

(c) 1 and 3 only (d) 1, 2 and 3

Sol: (d)

Dynamic characteristics

In many practical uses, the parameters to be measured are time varying that is, they are dynamic in nature. Thus, the output of an instrument is also time varying. The behaviour of an instrument under such time varying input output condition is called the dynamic response of an instrument. The analysis of such dynamic response is called dynamic analysis of the measurement system.

Dynamic quantities are of two types namely

1. **Steady-state periodic:** An output whose magnitude has a definite repeating time cycle is called steady state periodic.
2. **Transient:** An output whose magnitude does not repeat with time in known as transient.

The system response of first order and second order can be described by following specification parameters:

(i) **Over shoot:** The maximum amount by which the moving parts move beyond the steady state is known as over shoot.

(ii) **Time constant:** Time constant a measure of the inertia of the transducer. It is the measure of how fast a transducer reacts to change in its input.

5. Consider the following statements regarding encoders:

1. An encoder is a device that provides a digital output in response to a linear or angular displacement
2. A digital optical encoder is a device that converts motion into a sequence of digital pulses.
3. An incremental encoder produces equally spaced pulses from one or more concentric tracks on the code disk.

Which of the above statements are correct?

(a) 1 and 2 only (b) 2 and 3 only
(c) 1 and 3 only (d) 1, 2 and 3

Sol: (d)

Optical Encoder: An Encoder device that provides a digital output in response in a linear or angular displacement. An optical encoder is a suitable transducer for the measurement of angular position and has the added advantage of having a digital output. An optical encoder has four main parts: a light source, a code disk, a light detector and a signal conditioner. Most rotary encoders are composed of a glass or plastic code disk with a photographically deposited radial pattern organized in tracks. A digital optical encoder is a device that converts motion into a sequence of digital pulses. By counting or decoding these bits, the pulses can be converted into relative or absolute position measurements. Optical encoders are in rotary or linear configurations. The rotary encoders are of two forms: absolute encoder and incremental encoder.

Absolute Encoder: The absolute encoder is designed to produce a unique digital word corresponding to each rotational position of the shaft that distinguishes 'N' distinct positions of the shaft.

Incremental Encoder: An incremental encoder produces equally spaced pulses from one or more concentric tracks on the code disk. Each track has its own light beam. Thus, an encoder with 3 tracks will have three light sources and three light sensors.

6. Which one of the following statements is NOT correct regarding accelerometers?

(a) In displacement seismic accelerometer, the displacement of seismic mass is measured by displacement transducer itself

(b) In strain gauge accelerometer, the seismic mass is placed on a cantilever beam placed inside the housing

(c) In potentiometric accelerometer, in a spring-mass-damper system, the mass is connected with the wiper arm of the potentiometer

(d) The LVDT accelerometer consist of one primary and four secondary windings which are placed on either side of a central core

Sol: (d)

The LVDT accelerometer consists of one primary and two secondary winding which are placed on either side of a central core.

7. Which one of the following valves restricts or throttles the fluid in a particular direction to influence the volumetric flow of the fluid?

(a) Check valve (b) Flow control valve
(c) Quick exhaust valve (d) Sequence valve

Sol: (b)

- The check valve allow the flow in oen direction and in the other direction the flow is blocked.
- The flow control valve restricts or throttles the fluid in a particular direction to influece the volumetric flow of the fluid. The flow control is very important to regulate the speed of hydraulic or pneumatic actuator.
- The quick exhaust valve is used to vent a cylinder quickly by providing a shortcut for exhausting air.
- The sequence valve is used in a pneumatic circuit for switching operation depending upon

a preset pressure. The sequence valve opens once its inlet pressure rises above a preset pressure.

8. Which one of the following instructions is conditional instruction which allow the user to change the order in which the processor scans the program?

(a) Sequence instruction

(b) Communications instruction

(c) Control instruction

(d) Arithmetic instruction

Sol: (c)

9. Which one of the following signals are external commands signals provided to the controller?

(a) Control signals (b) Controlled signals

(c) Disturbance signals (d) Setpoint signals

Sol: (a)

10. Which one of the following is the smallest increment of movement into which the robot can divide its work volume?

(a) Spatial resolution of a robot

(b) Accuracy of a robot

(c) Repeatability of a robot

(d) Compliance of a robot

Sol: (a)

Spatial resolution of a robot is the smallest increment of movement in which the robot divide its entire work volume. The smallest increment in movement depends on two factors the robot's mechanical inaccuracies and the system control resolution.

11. Which one of the following sensors is a special type of force sensor composed of a matrix of force sensing elements?

(a) Touch sensor (b) Tactile array sensor

(c) Range sensor (d) Proximity sensor

Sol: (b)

Tactile array sensors A tactile array sensor is a special type of force sensor composed of a matrix of force-sensing elements. The force data provided by this type of device may be combined with pattern recognition techniques to describe a number of characteristics about the impression contacting the array sensor surface. Among these characteristics are (1) the presence of an obect, (2) the object's contact area , shape, location, and orientation, (3) the pressure and pressure distribution, and (4) force magnitude and location. Tactile array sensors can be mounted in the fingers of the robot gripper or attached to a work table as a flat touch surface figure and illustrate these two

12. Consider the following statements regarding robot and effectors:

1. Magnetic gripper can be a very feasible means of handling ferrous materials.
2. Hooks can be used as end effectors to handle containers of parts and to load and unload parts hanging from overhead conveyors.
3. Scoops and ladles can be used to handle certain materials in liquid or powder from.

Which of the above statement are correct?

(a) 1 and 2 only (b) 2 and 3 only

(c) 1 and 3 only (d) 1, 2 and 3

Sol: (d)

Hooks can be used as end-effectors to handle containers and to load and unload parts hanging from overhead conveyors. The item to be handled by a hook must have some sort of handle to enable the hook to hold it.

Ladles and scoops can be used to handle certain materials in liquid or powder form. One of the limitations is that the amount of material being scooped by the robot is sometimes difficult to control.

13. A flat plate of mass 1.5×10^6 mm^2 is pulled with a speed of 0.4 m/s relative to another plate located at a distance of 0.15 mm from it. What is the power required to maintain this speed, if the fluid separating them is having viscosity as 1 poise?

(a) 160 W (b) 158 W

(c) 145 W (d) 130 W

Sol: (a)

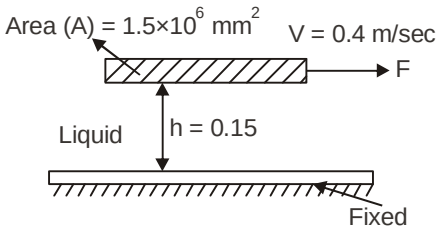

For in between liquid, $\mu = 1\text{Paise} = 0.1\frac{Ns}{m^2}$

Force required to maintain this motion,

$$F = \tau A$$

$$= \mu \times A\left(\frac{V-0}{h}\right)$$

$$= 0.1\frac{Ns}{m^2} \times \frac{1.5\times10^6}{10^6}m^2 \times \left(\frac{0.4-0}{0.15\times10^{-3}}\right)$$

$$= 400 \text{ N}$$

$\therefore$ Power required to maintain the speed for the plate, (R)

$$P = F \times V$$

$$= (400 \times 0.4)\text{Watt}$$

$$= 160 \text{ Watt}$$

14. A gas weighs 16 N/m^3 at 25°C and at an absolute pressure 0.25 N/mm^2. What is the gas constant approximately? (Take acceleration due to gravity as 9.81 m/s^2).

(a) 514.68 Nmkg^{-1} K^{-1}

(b) 542.55 Nmkg^{-1} K^{-1}

(c) 562.68 Nmkg^{-1} K^{-1}

(d) 592.55 Nmkg^{-1} K^{-1}

Sol: (a)

Given weight density $(\gamma) = 16 \text{ N/m}^3$

$\Rightarrow$ density $(\rho) = \left(\frac{16}{9.81}\right) = 1.631 \text{ kg/m}^3$

temperature, t = 25°C

$\Rightarrow$ T = (273 + t) = (273 + 25) = 298°K

Absolute pressure (p) = 0.25 N/mm^2 = 0.25 × 10^6 N/m^2 = 25 × 10^4 N/m^2

We know that, gas constant $(R) = \left(\frac{p}{\rho T}\right)$

$$= \left(\frac{25\times10^4}{1.631\times298}\right)$$

= 514.363 Nm/kgK

15. A pipe contains an oil of specific gravity 0.9. A differential manometer connected at the two points A and B shows a difference in mercury level as 15 cm. What is the difference of pressure at the two points?

(Take acceleration due to gravity as 9.81 m/s^2, specific gravity of mercury as 13.6 and density of water as 1000 kg/m^3)

(a) 18688 N/m^2 (b) 19688 N/m^2

(c) 15688 N/m^2 (d) 17866 N/m^2

Sol: (a)

Assuming A and B at the same level:

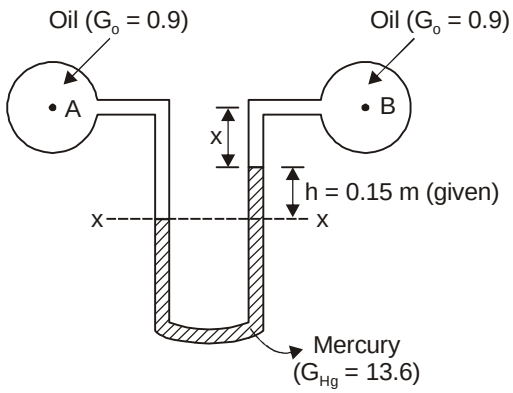

Here,

$$P_A + \rho_{oil}g\times(x+h) - \rho_{Hg}\times g\times h - \rho_{oil}\times g\times x = P_B$$

$$\Rightarrow (P_A - P_B) = gh\left(\rho_{Hg} - \rho_{oil}\right)$$

= 9.81 × 0.15 × 1000(G_{Hg} – G_{oil})

= 0.98 × 0.15 × 1000 × (13.6 – 0.9)

= 18688.05 N/m^2

16. Which one of the following is used in case in which the clutch runs free when the machine is being driven in the intended direction?

(a) Governing (b) Backstopping

(c) Under running (d) Front stopping

Sol: (b)

In back stopping or hold back application are

race is always fixed to stationary ground members. The function of clutch is to permit rotation of the mechanism connected to other races in one direction only. A break stop clutch is used to prevent the rotating shaft from being driven in the reverse direction.

Clutch will continue overrunning where the shaft rotates and engages to prevent reverse shaft rotation. It allow the driven shaft to rotate freely are direction. Backstop clutches are used for safety measure.

Overrunning: Here clutch spin freely the majority of the time, ocassionally being called upon to engage and drive. A common application for overrunning clutches is a two-speed drive, where two motors with different output speeds are connected to a single driven shaft through one-way clutches. When primary motors drive the m/c at low speed, the clutch engages. when secondary electric drived the m/c, the clutch overruns, switching from low speed to high speed.

17. In a band brake, the tension in the band decreases from the value P_1 at the pivot side of the band to P_2 at the lever side. If r is the radius of the drum, then the net torque on the drum is

(a) $(P_1 - P_2)/r$ (b) $(P_1 - P_2)r$

(c) $(P_1 + P_2)/r$ (d) $(P_1 + P_2)r$

Sol: (b)

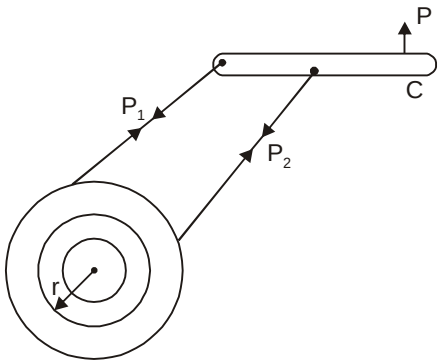

Breaking torque = $(P_3 - P_2)$ r

18. Consider the following statements regarding transmission shafts:

1. Counter shaft is secondary shaft which is driven by the main shaft from which the power is supplied to a machine component.
2. Jack shaft is an intermediate shaft between two shafts that is used in transmission of power.
3. A line shaft consists of a number of shafts, which are connected in an axial direction by means of couplings.

Which of the abvoe statements is/are correct?

(a) 2 only (b) 1 and 3 only

(c) 2 and 3 only (d) 1, 2 and 3

Sol: (d)

- **Counter shaft:** It is a secondary shaft, which is driven by the main shaft and from which the power is supplied to a machine component offen, the counter shaft is driven from the main shaft by means of pair of spur or helical gear and thus rotates counter to the direction of main shaft.
- **Jack shaft:** It is an auxiliary or intermediate shaft between two shaft that are used in transmission of power. It's function is same as countershaft.
- **Line shaft:** It consists of number of shaft, which are connected in axial direction by means of coupling. It is popular in workshop using group drive.

19. In the rolling process, if v_r is the velocity of roll surface, V_0 is the velocity of material at the entrance to the deformation zone and V_1 is the velocity of material at the exit of the rolls, then the forward slip is

(a) $\frac{V_r}{V_1 - V_r} \times 100$ percent

(b) $\frac{V_r}{V_r - V_0} \times 100$ percent

(c) $\frac{V_1 - V_r}{V_r} \times 100$ percent

(d) $\frac{V_r - V_0}{V_r} \times 100$ percent

Sol: (c)

In Rolling forward slop is given by

$$\text{Forward slip} = \frac{V_1 - V_r}{V_r} \times 100$$

where V_1 = Exit velocity of material

V_r = Roll velocity

20. Which one of the following fits is used for high-strength assemblies where high resulting pressures are required?

(a) Light drive fit (b) Medium drive fit

(c) Heavy drive fit (d) Force fit

Sol: (d)

- **Light Drive Fit:** It is used for the assemblies required light assembly pressure and produce more or less permanent assemblies.
- **Medium Drive Fit:** It is switable for ordinary steel paris, or shrink fit on light sections.
- Medium drive fits are about the tightest fits that can be used with high grade cast-Iron external members.
- **Heavy Drive fit:** These type of fits are suitable for heavier steel parts or shrink fits in medium sections.
- **Force Drive fit:** These type of fits are for parts which can be highly stressed or for shrink fits where the heavy pressing force required are impractical.

21. In PERT, which one of the following is the estimator expects that he may come across some sort of uncertainities and many a time the things will go right?

(a) Optimistic time (b) Pessimistic time

(c) Likely time (d) Unlikely time

Sol: (c)

PERT uses three point estimation approach for a task. Any task filled with uncentainties can have a wide range of estimate in which task actually will get completed. Uncentainties include both favourable condition (opportunities) as well as unfavourable conditions (throat).

The 3 points of estimates are as below:

- **Optimistic estimate:** Estimate when all favourable things will happen. Here task is proceed better than normally expected.
- **Pessimistic estimate:** Estimate when all unfavourable conditions happen.
- **Most likely estimate:** When both favourable and unfavourable conditions will happen. Here assumption is task is proceed as normal.

22. In which one of the following the critically of the item is most important than the cost factor of the item?

(a) ABC analysis (b) VED analysis

(c) p system (d) q system

Sol: (b)

- VED analysis is an inventory management technique that classifies inventory based on its functional importance. VED analsysis stands for vital, essential and desirable.
- ABC analysis categories as A, B and C in descending value. The item in the category have the highest value. B category items are of lower value than A and C category items have the lowest value. The ABC analysis provides a mechanism for identifying items that have a significant impact on overall inventory cost.
- **Continuous review system (Q):** A continuous review or reorder system or fixed order quantity system tracks the remaining inventory of an item each time a withdrawal is made to determine whether it is time to reduces.
- **P system (periodic review):** Inventory is reviewed at (prefixed) periodic internal irrespective to of the level to which inventory drops. An order is placed to bring-up the inventory to the maxium level.

23. Which one of the following is the projection on a pattern that is used to make recesses in the mould to locate the core?

(a) Sprue (b) Core print

(c) Gate (d) Riser

Sol: (b)

Core prints are the projections provided on the

pattern to accomodate core inside the mould cavity.

24. Which one of the following is a disadvantage of permanent mold or gravity die casting?

(a) the surface of casting becomes hard due to chilling effect

(b) Good surface finish and surface details re obtained

(c) The process requires more labor

(d) Fast rate of production can be attained

Sol: (a)

Due to faster cooling surface of the casting is die casting method become hard this can be takes is disadvantage of die casting.

25. In critical speed of a light shaft having a single disc without damping, the critical speed of the shaft is

(a) equal to the natural frequency of the system in longitudinal vibration

(b) equal to the natural frequency of the system in torsional vibration

(c) equal to the natural frequency of lateral vibration of the shaft

(d) so relationship to any of the natural frequency systems

Sol: (c)

The critical speed of a rotating shaft is the speed at which the shaft starts to vibrate violently in the transverse direction. Critical speed is also called 'whipping' or 'whirling' speed. The main reason for the whirling speed is the mass unbalance of the shaft whe the mass centre does not coincide with the geometric centre.

(a) Single disc without damping

$$r = e\beta^2/(1-\beta^2)$$

where $\beta = \omega/\omega_n, \omega_n = (k/m)^{1/2}$

The deflection of the shaft tends to infinity when $\beta = 1$. Thus, the critical speed of the shaft is equal to the natural frequency of lateral vibrations of the shaft. For $\beta < 1$, r is positive, i.e. the disc rotates with heavy side outwards, For $\beta > 1$, r is negative, i.e. the disc rotates with light side outwards, also $\beta < 1$ corresponds to zero degree phase difference and $\beta > 1$ corresponds to 180° phase difference. When $\beta >> 1$, $r \to e$, i.e. the point G approaches O and the disc rotates about its centre of gravity. Therefore, it is alays advisable to operate the machine much above its natural frequency.

26. Which one of the following is formed due to large friction and stronger adhesion between chips and tool face?

(a) Continuous chip

(b) Discontinuous chip

(c) Continuous chip with built-up edge

(d) Discontinuous chip with built-up edge

Sol: (c)

Continuous chips with built up is formed when friction between chip and tool face is high during the machining of ductile material. Due to high friction some part of chip get adhere to the tool face which is called built up edge.

27. Total Quality Management (TQM) and Quality assurnace are the responsibility of everyone involved in designing and manufacturing of the product. Who among the following pioneers has NOT been quality control heightened?

(a) Deming (b) Taguchi

(c) Juran (d) B.F. Skinner

Sol: (d)

- Deming was a leading management thinker in the field of quality. He was statistician and business consultant whose method helped lasten Japan's recovery after the 2nd World war. He derived the first philosphy and method that allowed individuals and organisation to plan continually improve themselves. He is known as total quality thinker. His methodology is termed Deming cycle for continuous quality improvement. He is often referred to as father of TQM.

- Taguchi off line methods are effective in improving quality and cutting down costs at the same time. In Taguchi's method ,quality is measured by the deviation of a characteristic from its target value.
- Taguchi attaches a monetary value to quality because he feels that this will make quality improvement understood by all (Technical personel as well as management).

Key elements of his quality philosophy include the following:

1. Taguchi loss function,
2. Robust Design

- Juran defined quality as fitness for use and also contributed to the concept of cost of quality. Accoding to Juran, Quality is no accident & it must be planned. There are no shortcuts to quality.
- Juran developed the idea of the quality trilogy to bring continous improvement in the process. The elements of the trilogy are quality planning, quality improvement and quality control.
- B.F. Skinner was an American Psychologist behaviorist, author, inventer and social philosopher.

28. Which one of the following is the angle between the planes of end flank immediately below the end cutting edge and line perpendicular to the base and right angle to the axis?

(a) Back rake angle (b) Side rake angle
(c) End relief angle (d) Side relief angle

Sol: (d)

Side Relief Angle: It is the angle between the portion of side flank immediately below the side cutting edge, and a line drawn though this cutting edge perpendicular to the base. It is usually measured in a plane perpendicular to the side flank.

29. Consider the following statements related to stepless drive of machine tools:

1. The spindle speeds available are fixed, it is not possible to use optimum cutting speeds with any of the workpiece diameters.
2. Charging the axial distnace of the discs will vary the point of contact between the belt and disc.
3. The surface finish achieved will not be uniform.

Which of the above statements are correct?

(a) 1 and 2 only (b) 2 and 3 only
(c) 1 and 3 only (d) 1, 2 and 3

Sol: (*)

In steped drive following are the short coming.

- The spindle speeds available are fixed, it is not possible to use optimum cutting speeds with any of the workpiece diameters.
- Charging the axial distnace of the discs will vary the point of contact between the belt and disc.
- The surface finish achieved will not be uniform.

To overcome above short coming stepless drive is used.

30. Consider the following statements regarding machine vibration:

1. If the mechanical stresses are below the acceptable safe working stress levels of the materials involved, no direct protection methods are required.
2. If the stresses exceed the safe levels, corrective measures such as stiffening, reduction of inertia and bending moment effects, and incorporation of further support members, as well as possible uses of isolators, may be required.
3. Shock isolators differe from vibration isolators in that shock requires a stiffer spring and a higher natural frequency for the resilient element.

Which of the above statements are correct?

(a) 1 and 2 only (b) 2 and 3 only
(c) 1 and 3 only (d) 1, 2 and 3

Sol: (d)

- Vibrations result from dynamic forces that set up a series of motions within a product.

The forced motions may be linear, angular (torsion), or a combination of both. A vibratory system includes, in general, a means for storing potential energy (spring or elasticity), a means for storing kinetic energy (mass or inertia), and a means by which energy is gradually lost (damping or resistance).

- Fatigue, which is the tendency of a material to yield and fracture under cyclic stress loads considerably below its tensile strength, is a failure mechanism that may result from vibrations. Fatigue failures include high cycle fatigue, acoustic fatigue, and fatigue under combined stresses such as temperature extremes, temperature fluctuations, and corrosion.
- Protective measures against vibration and shock are generally determined by an analysis of the deflections and mechanical stresses produced by these load conditions. This involves the determination of natural frequencies and evaluation of the mechanical stresses within components and materials produced by the shock and vibration environment. If the mechanical stresses are below the acceptable safe working stress levels of the materials involved, no direct protection methods are required. If the stresses exceed the safe levels, corrective measures such as stiffening, reduction of inertia and bending moment effects, and incorporation of further support members, as well as possible uses of isolators, may be required. If such approaches do not reduce the stresses below the acceptable safe levels, further reduction is usually possible by the use of shock-absorbing mounts.

In addition to using proper materials and configurations, it is necessary to control the amount of shock and vibration experienced by the product. Damping systems are used to reduce peak oscillations and special stabilizers can be employed when unstable configurations are involved. Typical examples of dampers are viscous hysteresis, friction, and air damping. Vibration isolators are commonly identified by their construction and material used for resilient elements like rubber coiled spring, and woven metal mesh. Shock isolators differ from vibration isolators in that shock requires a stiffer spring anda higher natural frequency for the resilient element. Isolation mounting systems are of the type installed underneath. the over-and-under type, and inclined isolators.

31. Which one of the following alloys is most suitable for applications in bearings, bushings, piston rings, steam fittings and gears?

(a) Catridge brass

(b) Tin bronze

(c) Leaded yellow brass

(d) Beryllium copper

Sol: (b)

- Berllium copper are used for electronic connectors, telecommunications product, computer product and small spring. It's main application include: Jet air craft landing gear bearing and bushings,

  Tin bronze: They are used for piston pin and linkage bushings, valve guide and many types of bearing inducing rolling mill, warm and pilot for the machine tool industry.
- **Cartridge brass:** It is used in ammunition cartridges. It is used for numerous electrical application such as switch and outlet boxes.
- **Lead yellow bars:** Application - Plumbing, fittings and fixtures, ferrules, valves, hardware etc.

32. In general, annealing is carried out to

(a) increase softness

(b) increase stresses

(c) decrease ductility

(d) decrease toughness

Sol: (a)

Annealing is carried out at 15°C to 40°C above upper critical temperature for hypoeutectoid steel and above lower critical temperature for hyper-eutectoid steel. It releive internal stresses by removing the crystal defects in work piece and increases softness,

ductility and toughness.

33. Consider the following statements related to compute the equilibrium concentrations of the two phases:

1. A tie line is constructed across the two-phase region at the temperature of the alloy.
2. The intersections of the tie line and the phase boundaries on either side are noted.
3. Perpendicualrs are dropped from these intersections to the horizontal composition axis, from which the composition of each of the respective phases is read.

Which of the above statement is/are correct

(a) 1 only (b) 3 only
(c) 1 and 3 only (d) 1, 2 and 3

Sol: (a)

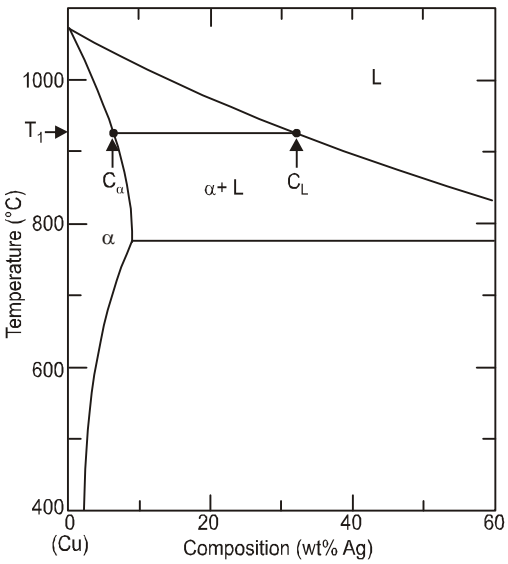

34. In which of the following microconstituents, α-Ferrite + Fe_3C phases are present?

1. Spherodite
2. Coarse pearlite
3. Fine pearlite

Select the correct answer using the code given below:

(a) 1 and 2 only (b) 1 and 3 only
(c) 2 and 3 only (d) 1, 2 and 3

Sol: (c)

When pearlite is heated to just below the eutectoid temperature and held at that temperature for period of time say for a day at 873, the cementite lamellae transforms to spherical shapes (spheroidites) having higher toughness and lower hardness than pearlitic structure. It contain sphere like cementite structure.

35. Which one of the following is the capacity of a material to absorb energy when it is deformed elastically and then, upon unloading, to have this energy recovered?

(a) Resilience (b) Ductility
(c) Brittleness (d) Hardness

Sol: (a)

It is defined as the ability of the material to absorb energy when deformed elastically and to release the energy when unloaded. This property is essential for spring materials. Resilience is measured by a quantity, called modulus of resilience or proof resilience, which is the strain energy per unit volume that is required to stress the specimen in a tension test to the elastic limit point. It is the area below stress-strain curve in a tension test upto the elastic limit.

36. What is the shape of indenter for vickers microhardness testing technique?

(a) Sphere (b) Diamond cone
(c) Diamond pyramid (d) Cube

Sol: (c)

This test involves indentation by a pyramid shaped diamond tool with an angle of 136° between opposite faces.

37. Corrosion penetration rate is directly proportional to

(a) Exposed specimen area
(b) Density
(c) Weight loss after exposure time
(d) Exposure time

Sol: (c)

The corrosion penetration rate (CPR) is calculated as follows:

$$CPR = \frac{k \times w}{\rho \times A \times T}$$

where k = constant
w = total weight lost
T = time taken
A = the surface area of the exposed metal
ρ = the metal density in g/cm^3

38. Which one of the following measures is correct to reduce the effects of galvanic corrosion?

(a) It uses cathode area as large as possible
(b) It avoids an unfavourable anode-to-cathode surface area ratio
(c) It uses an anode area as small as possible
(d) It electrically insulates similar metals from each other

Sol: (d)

Measures to avoid galvanic corrosion:

(i) Preferring larger surface area for anodic metal.
(ii) Minimizing the area ratio: smaller the cathod to anode to area, less detrimental the ensuring deterioration.
(iii) Selection of two dissimilar metals which are closer to each other in e.m.f. series.
(iv) Use of single phase alloys.
(v) Insulation material blocks the flow of electrons thus prevneting the oxidation and reduction.

39. Consider the following statements regarding corrosion:

1. The formation of a film of atoms or molecules on the surface of an anode so that corrosion is slowed down, is called passivation.
2. Local corrosion attack resulting from the formation of small anodes on a metal surface, is known as intergranular corrosion.
3. Preferential corrosion occuring at grain boundaries or at regions adjacenet to the grain boundaries, is called pitting corrosion.

Which of the above statements is/are correct?

(a) 1 and 2 only
(b) 2 and 3 only
(c) 1 only
(d) 3 only

Sol: (c)

- Some normally active metals and alloys, under particular environmental conditions, lose their chemical reactivity and become extremely inert. This phenomenon, termed **passivity,** is displayed by chromium, iron, nickel, titanium, and many of their alloys. It is felt that this passive behavior results from the formation of a highly adherent and very thin oxide film on the metal surface, which serves as a protective barrier to further corrosion. Stainless steels are highly resistant to corrosion in a rather wide variety of atmospheres as a result of passivation.
- **Pitting** is another form of very localized corrosion attack in which small pits or holes form. They ordinarily penetrate from the top of a horizontal surface downward in a nearly vertical direction. It is an extremely insidious type of corrosion, often going undetected and with very little material loss until failure occurs. The mechanism for pitting is probably the same as for crevice corrosion in that oxidation occurs within the pit itself, with complementary reduction at the surface.
- As the name suggests, intergranular corrosion occurs preferentially along grain boundaries for some alloys and in specific environments. The net result is that a macroscopic specimen disintegrates along its grain boundaries. This type of corrosion is especially prevalent in some stainless steels.

40. A cantilever beam of negligible mass has a mass m at its free end. IF the length of the cantilever is havled, what is the factor by which its natural frequency is increased?

(a) $\sqrt{8}$ times
(b) $\sqrt{6}$ times
(c) $\sqrt{5}$ times
(d) $\sqrt{3}$ times

Sol: **(a)**

Stiffness of beam due to mass $m = \frac{3EI}{L^3}$

Natural frequency $(\omega) = \sqrt{\frac{K}{m}} = \sqrt{\frac{3EI}{L^3 \cdot m}}$

Now, L = L/2

$$\omega' = \sqrt{\frac{3EI}{\left(\frac{L}{2}\right)^3 \cdot m}}$$

$$= \sqrt{8} \times \sqrt{\frac{3EI}{L^3 m}} = \sqrt{8} \times \omega$$

41. Consider the following statements regarding kinematic pairs:

1. When a pair has a point or line contact between the links, it is known as lower pair.
2. When the elements of a pair are held together mechanically, it is known as closed pair.
3. If two mating links have a turning as well as sliding motion between them, they form a screw pair.
4. When two links of a pair are in contact either due to force of gravity, they constitute an unclosed pair.

Which of the above statements are correct?

(a) 2 and 4 only (b) 1 and 3 only
(c) 1, 3 and 4 only (d) 2, 3 and 4

Sol: **(d)**

- **Lower Pair:** A pair of links having surface or area contact between the members is known as a lower pair. The contact surfaces of the two links are similar.
- **Higher Pair:** When a pair has a point or line contact between the links, it is known as a higher pair. The contact surfaces of the two links are dissimilar.
- **Closed Pair:** When the elements of a pair are held together mechanically, it is known as a closed pair. The two elements are geometrically identical; one is solid and full and the other is hollow or open. The latter not only envelops the former but also encloses it. The contact between the two can be broken only by destruction of at least one of the members.

All the lower pairs and some of the higher pairs are closed pairs.

- **Unclosed Pair:** When two links of a pair are in contact either due to force of gravity or some spring action, they constitute an unclosed pair. In this, the links are not held together mechanically, e.g., cam and follower pair of
- **Screw Pair (Helical Pair)** If two mating links have a turning as well as sliding motion between them, they from a screw pair. This is achieved by cutting matching threads on the two links.

The lead screw and the nut of a lathe is a screw pair.

42. The turbine rotor of a ship has a mass of 3500 kg. It has a radius of gyration of 0.45 m and a speed of 3000 rpm clockwise when looking from stern. If the ship is steering to the left on a curve of 100 m radius at a speed of 36 km/h, then the gyroscopic couple is

(a) 22.27 kN-m (b) 21.27 kN-m
(c) 12.47 kN-m (d) 11.47 kN-m

Sol: **(a)**

m = 3500 kg, N = 3000 rpm

k = 0.45 m

$V = 36 \text{ km/hr} = 36 \times \frac{1000}{3600} = 10 \text{ m/s}$

$I = mk^2 = 3500 \times (0.45)^2 = 708.75 \text{ kgm}^2$

$\omega = \frac{2\pi \times 3000}{60} = 314.16 \text{ rad/s}$

R = 80 m

$$\omega_P = \frac{V}{R} = \frac{10}{100} = 0.1 \text{ rad/s}$$

Gyroscopic couple,

$$C = I\omega\omega_P$$
$$= 708.75 \times 314.16 \times 0.1$$
$$= 22.266 \text{ kN-m}$$

43. Consider the following statements regarding governors:

1. A Wilson governor is a spring-controlled governor in which the vertical arms of the bell-crank lever are fitted with spring balls.
2. A Hartung governor is a spring-loaded type governor in which two bell-crank levers are pivoted at the ends of two arms which rotate with the spindle.
3. In a spring-controlled gravity governor, two bell-crank levers are pivoted on the moving sleeve.
4. In a Watt governor, a pair of balls (masses) is attached to a spindle with the help of links.

(a) 1 and 2 only (b) 3 and 4 only
(c) 1, 3 and 4 only (d) 1, 2, 3 and 4

Sol: (b)

- In watt governor, a pair of balls (masses) is attached to a spindle with the help of links.
- In Hartnell governor, the balls are controlled by a spring. Initially the spring is fitted in compression so that a force is applied to the sleeve. Two bell-crank levers, each carrying a mass at one end and a roller at the other are pivoted to a pair of arms which rotate with spindles.
- Hartung governor is a spring - Controlled governor in which is the vertical arms of the bell-crank lever are fitted with spring balls.
- A Wilson-Hartnell governor is a spring loaded type of governor. In this, two belt-crank levers are pivoted at the ends of two arms which rotate with the spindle.
- In a spring-controlled gravity governor, two bell-crank levers are pivoted on the moving sleeve.

44. Which one of the following principles states that the inertia forces and couples, and external forces and torques on a body together give statical equilibrium?

(a) D'Alembert principle
(b) Paul Ehrlich principle
(c) David Hilbert principle
(d) Edward Jenner principle

Sol: (a)

D'Alembert's Principle states that the inertia forces and couples, and the external forces and torques on a body together give statical equilibrium.

Inertia is a property of matter by virtue of which a body resists any change in velocity.

Inertia force $F_i = -m f_g$

where

m = mass of body

f_g = acceleration of centre of mass of the body

The negative sign indicates that the force acts in the opposite direction to that of the acceleration. The force acts through the centre of mass of the body. Similarly, an inertia couple resists any change in the angular velocity.

Inertia couple,

$$C_i = -I_g\alpha$$

where

I_g = moment of inertia about an axis passing through the centre of mass G and perpendicular to plane of rotation of the body

α = angular acceleration of the body

Let

$\Sigma F = F_1, F_2, F_3$, etc. external forces on the body

and $\Sigma T = T_{g1}, T_{g2}, T_{g3}$, etc. = external torques on the body about the centre of mass G.

According to D' Alembert's principle, the vector sum of forces and torques (or couples) has to be zero, i.e.,

$\Sigma F + F_i = 0$

$\Sigma T + C_i = 0$

These equations are similar to the equation of a body in static equilibrium, i.e., $\Sigma F = 0$ and $\Sigma T = 0$.

45. Consider the following statements regarding gears:

1. A cycloid is the locus of a point on the circumference of a circle that rolls without slipping on a fixed straight line.
2. A hypocycloid is the locus of a point on the circumference of a circle that rolls without slipping on the circumference of another circle.
3. An epicycloid is the locus of a point on the circumference of a circle that rolls without slipping inside the circumference of another circle.

Which of the above statements is/are correct?

(a) 1 and 3 only (b) 2 only
(c) 2 and 3 only (d) 1 only

Sol: (d)

Cycloidal Profile Teeth: In this type, the faces of the teeth are epicycloids and the flanks are the hypocycloids.

- A cycloid is the locus of a point on the circumference of a circle that rolls without slipping on a fixed straight line.
- An epicyloid is the locus of a point on the circumference of a circle that rolls without slipping on the circumference of another circle.
- A hypocycloid is the locus of a point on the circumference of a circle that rolls without slipping inside the circumference of another circle.

46. Centroid of a body coincides with its centre of mass or its centre of gravity only if the material composing the body is

(a) uniform or homogeneous
(b) in equilibrium
(c) in static equilibrium
(d) translating with constant velocity

Sol: (a)

- The centroid coincides with the center of mass or the center of gravity only if the material of body is homogenous (density or specific weight is constant throughout the body)

Note:

- Centroid is the geometric center of an object
- If an object has axis of symmetry, then the centroid of object lies on the that axis.
- Formula used to locate center of gravity or centroid simply represent a balance between the sum of moments of all the parts of system and the moment of the resultant for the system
- In some cases centroid can be located at a point not on the object example in the case of a semicircular ring

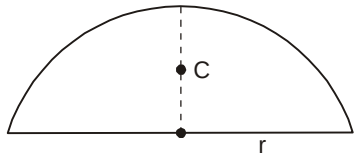

Semicircular Ring

47. A cast-iron pipe of 750 mm diameter is used to carry water under a head of 60 m. What is the approximate thickness of the pipe if permissible stress is to be 20 MPa? (Take specific weight of water as 9.81 kN/m^3)

(a) 22 mm (b) 14 mm
(c) 11 mm (d) 7 mm

Sol: (c)

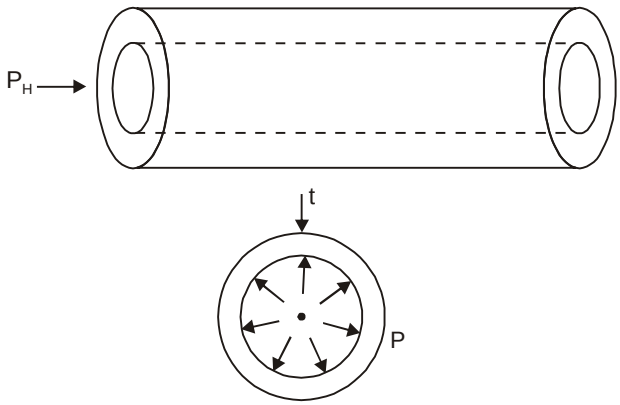

UPPSC-AE 2021

Online Test Series

CE ME EE

Valid till **20 April 2022**

- Test papers as per UPPSC-AE exam pattern & syllabus
- Thoroughly researched test papers by subject experts
- Determine preparation level in real exam environment
- Comprehensive analysis and feedback after each test

(Tests are active) **6 Tests**

3 Paper-1 = (Tech + Hindi)
3 Paper-2 = (Tech + General Studies)

+

6 Tests Starts from 06th March

3 Paper-1 = (Tech + Hindi)
3 Paper-2 = (Tech + General Studies)

= Total **12** Tests

IES MASTER .org
Institute for Engineers (IES/GATE/PSUs)

F-126, Katwaria Sarai, New Delhi-110016 | Call +91 801 00 09955
Email: info@iesmaster.org

Pressure due to water (P_H) = internal pressure (P)

$$P_H = \gamma_w \cdot H = 9.81 \times 60 = 588.6 \text{ kN/m}^2$$

Hoop stress $(\sigma) = \dfrac{P_H d}{2t}$

or, $2 = \dfrac{588.6 \times 10^{-3} \times 750}{2 \times t}$

$t = 11.036$ mm

48. A 120 mm wide and 10 mm thick steel plate is bent into a circular arc of 8 m radius. What is the bending moment which will produce the maximum stress? (Take Young's modulus as 200 GPa)

(a) 250 Nm (b) 212 Nm
(c) 200 Nm (d) 172 Nm

Sol: (a)

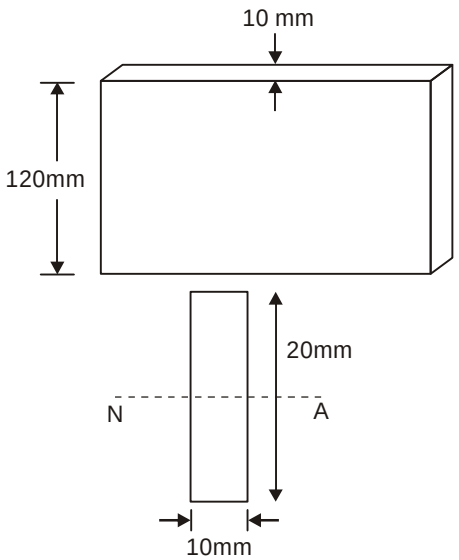

Using Bending equation

$$\frac{\sigma}{y} = \frac{M}{I} = \frac{E}{R}$$

$$I = \frac{1}{12} \times 120 \times 10^3 \text{mm}^4$$

$E = 200 \times 10^3$ MPa

$R = 8$m

$$M = \frac{EI}{R} = \frac{200 \times 10^3 \times 120 \times 10^3}{12 \times 8 \times 1000}$$

= 250000 Nmm

= 250 Nm

49. A simply supported beam of 8m length carries three-point loads of 8 kN, 4 kN, and 10 kN at 2m, 5m and 6m respectively from the left end. What are the left and right support reactions respectively?

(a) 12 kN and 10 kN (b) 9 kN and 11 kN
(c) 11 kN and 9 kN (d) 10 kN and 12 kN

Sol: (d)

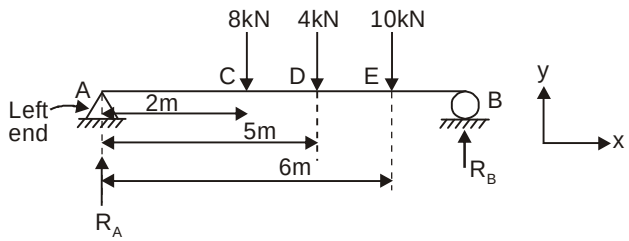

$\Sigma F_y = 0,$

$R_A + R_B = 22$ kN ...(i)

$\Sigma M_A = 0$

$8 \times 2 + 4 \times 5 + 10 \times 6 = R_B \times 8$

$\therefore$ $R_B = 12$ kN ↑

From equation (i)

$\therefore$ $R_A = 22 - 12 = 10$ kN ↑

50. Which one of the following is NOT used as support for beams?

(a) Roller support
(b) Hinged support
(c) Fixed support
(d) Independent support

Sol: (d)

51. The initial frictional resistance of an unloaded pulley block is 2.6 kN. The friction increases at the rate of 1.4 kN per 100 kN load lifted by the block. The vertically ratio is 18. The efficiency of the block at the load of 1200 kN is approximately

(a) 64% (b) 77%
(c) 85% (d) 87%

Sol: (b)

Rate of increase of friction = $\dfrac{1.4\text{KN}}{100\text{KN}}$ load lifted

When load = 1200 KN

$$\text{Frictional resistance } (F_f) = 2.6 \times \frac{1200}{100} \times 1.4$$

$$= 19.4 \text{ KN}$$

$$P_{effective} = P_{applied} - F_f$$

or, $$\frac{1200}{18} + F_f = P_{applied}$$

or, $$P_{applied} = \frac{1200}{18} + 19.4$$

$$= 86.07 \text{ KN}$$

$$\text{So, Efficiency} = \frac{\text{Load}}{P_{applied} \times \text{Velocity ratio}} \times 100$$

$$= \frac{1200}{86.07 \times 18} \times 100$$

$$= 77.45\%$$

52. The distance between the supports of a simply supported beam is L. The beam has two equal overhangs of length L/3 over each support. The beam carries a point load 2W at the centre and point load W at each end. Deflection at the centre is

(a) 1.8 mm (b) 7.2 mm

(c) 0 mm (d) 3.6 mm

Sol: (c)

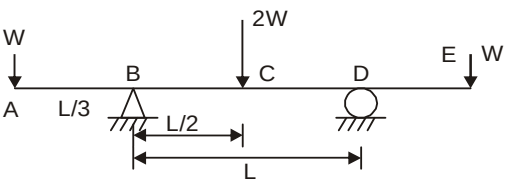

Since, in question value of EI is not given, but we have zero deflection in options, so we must check it by assuming uniform EI.

FBD of BCD :

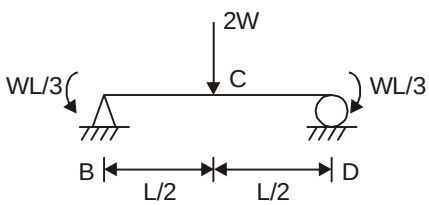

$$M_0 = \frac{wL}{3}$$

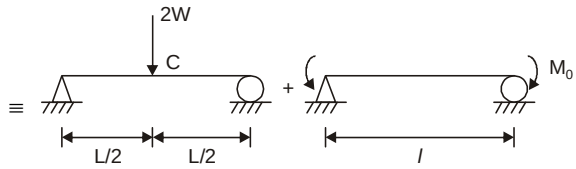

$$\delta_B = \frac{(2w)l^3}{48EI} - \frac{M_0 l^2}{8EI}$$

$$= \frac{wl^3}{24EI} - \frac{\left(\frac{wl}{3}\right)l^2}{8EI} = 0$$

53. The maximum bending moment at the fixed end in a cantilever of length L carrying a uniformly distributed load W per unit length across the whole span is

(a) $WL^2/2$ (b) $WL^2/4$

(c) $WL^3/4$ (d) $WL^3/8$

Sol: (a)

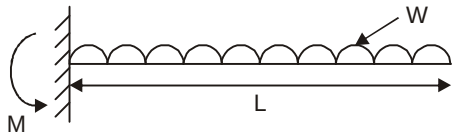

$$M = W \times L \times \frac{L}{2} = \frac{wL^2}{2}$$

54. A body of weight 100 N is placed on a rough horizontal plane. If a horizontal force of 60 N just causes the body to slide over the horizontal plane, then the coefficient of friction between the bdoy and the horizontal plane is

(a) 0.6 (b) 0.3

(c) 0.2 (d) 0.1

Sol: (a)

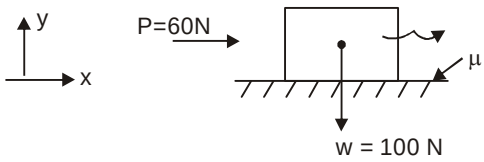

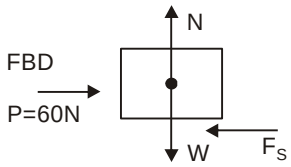

$$\sum F_y = 0$$

$$N = W = 100 \text{ N}$$

$$\sum F_x = 0$$
$$60 - F_S = 0$$
$$60 = F_S = \mu N$$
or, $$\mu = \frac{60}{100} = 0.60$$

55. A fire engine raises water at the rate of 6000 litres per minute through a height of 2 m and discharges it at 10 m/s. The H.P. of fire engine is nearly equal to (Take acceleration due to gravity as 9.81 m/s^2)

(a) 6.5 (b) 7.2
(c) 8.0 (d) 9.5

Sol: (d)

Weight of water lifted by engine in 1 min

$$= \frac{6000}{1000} \times 1000 = 6000 \text{Kg.}$$

Total work done in 1 min.

$$= mgh + \frac{1}{2}mv^2$$
$$= 6000 \times 9.81 \times 2 + \frac{1}{2} \times 6000 \times 10^2$$
$$= 417720 \text{ J}$$
$$\text{Power} = \frac{417720}{60} = 6962 \text{W} = \frac{6962}{746}$$
$$= 9.33 \text{ hp.}$$

56. A spherical vesel has 1 m diameter. It is subjected to internal pressure of 1.5 N/mm^2. If maximum stress is not to exceed 200 N/mm^2 and joint efficiency is 80%, then the thickness of the plate required is

(a) 3.20 mm (b) 4.21 mm
(c) 5.22 mm (d) 2.34 mm

Sol: (d)

Data given

$$d = 1\text{m}$$
$$P = 1.5 \text{ N/mm}^2$$
$$\sigma = 200 \text{ N/mm}^2$$
$$\eta = 80\%$$
$$t = ?$$

$$\sigma_c = \frac{Pd}{4t\eta}$$
$$200 = \frac{1.5 \times 1}{4 \times t \times 0.8}$$
$$t = 2.34 \text{ mm}$$

57. A material has modulus of rigidity equal to 0.4 × 10^5 N/mm^2 and bulk modulus equal to 0.75 × 10^5 N/mm^2. The Poisson's ratio is

(a) 0.2736 (b) 0.1927
(c) 0.3121 (d) 0.4376

Sol: (a)

$$K = 0.75 \times 10^5 \text{ N/mm}^2, \quad G = 0.4 \times 10^5 \text{ N/mm}^2$$

$$\mu = \frac{3K - 2G}{6K + 2G}$$
$$= \frac{3 \times (0.75 \times 10^5) - 2 \times (0.4 \times 10^5)}{6 \times (0.75 \times 10^5) + 2(0.4 \times 10^5)}$$
$$= \frac{3 \times 0.75 - 2 \times 0.4}{6 \times 0.75 + 2 \times 0.4} = 0.2736$$

Note :

(i) $E = 3K(1 - 2\mu)$

(ii) $E = 2G(1 + 1\mu)$

(iii) $E = \frac{9KG}{3L + G}$

(iv) $\mu = \frac{3K - 2G}{6K + 12G}$

Here, E = Young's modulus, G = Shear Modulus
K = Bulk modulus, l = Poisson's ratio

58. For a 99.65 wt% Fe-0.35 wt% C alloy at a temperature just below the eutectoid the fraction of the proeutectoid ferrite and pearlite are respectively

(a) 0.44 and 0.56 (b) 0.56 and 0.44
(c) 0.044 and 0.056 (d) 0.056 and 0.044

Sol: (a)

The fractions of proeutectoid ferrite and pearlite are determined by using the lever rule and a tie line that extends only to the

eutectoid composition.

$$W_P = \frac{0.35 - 0.022}{0.76 - 0.022} = 0.44$$

and

$$W_{\alpha'} = \frac{0.76 - 0.35}{0.76 - 0.022} = 0.56$$

59. Consider the following statements regarding the mechanical behavior of iron-carbon alloys:

1. Martensitic steels are most ductile.
2. Tempered martensite is relatively brittle.
3. Fine pearlite is more brittle than coarse pearlite.

Which of the above statements is/are correct?

(a) 1 only (b) 2 only
(c) 3 only (d) 1, 2 and 3

Sol: (c)

- Fine pearlite is harder and stronger than coarse pearlite but not as ductile as coarse pearlite.
- Martensite as extremely hard and brittle.
- Tempering is used for martensitic steel to reduce its brittleness without significant loss in its hardness. Through this process toughness is introduced in martensite.

60. Which one of the following contain other alloying elements such as copper, vandaium, nickel and molybdenum in combined concentrations as high as 10 wt%, and posses higher strengths than the plain low-carbon steels?

(a) Alloy steels
(b) Medium carbon steels
(c) Stainless steels
(d) High-strength, low-alloy steels

Sol: (d)

High strength low alloy steel: It is a group of low carbon alloys generally containing carbon less than 0.25% wt and also known as high strength low alloy steel (HSLA). Major alloying element in HSLA is copper, vanadium, nickel and molebdenum in combined concentration as high as 10% wt. It has higher strength than low carbon steads.

61. Which one of the following is the angle through which the cam turns during the time the follower rises?

(a) Angle of ascent (b) Angle of dwell
(c) Angle of descent (d) Angle of action

Sol: (a)

- Angle of Ascent (ϕ_a) It is the angle through which the cam turns during the time the follower rises.
- Angle of Dwell (δ) The angle of dwell is the angle through which the cam turns while the follower remains stationary at the highest or the lowest position.
- Angle of Descent (ϕ_d) It is the angle through which the cam turns during the time the follower returns to the initial position.
- Angle of Action The angle of action is the total angle moved by the cam during the time, between the beginning of rise and the end of the return of the follower.

62. Consider the following statements regarding cams:

1. Base circle is the smallest circle tangent to the cam profile (contour) drawn from the centre of rotation of a radial cam.
2. Pitch curve is the curve drawn by the trace point assuming that the cam is fixed, and the trace point of the follower rotates around the cam.
3. Pitch circle is the circle passing through the pitch point and concentric with the base circle.
4. The smallest circle drawn tangent to the pitch curve is known as the prime circle.

Which of the above statements are correct?

(a) 1 and 3 only (b) 2 and 4 only
(c) 2 and 3 only (d) 1, 2, 3 and 4

Sol: (d)

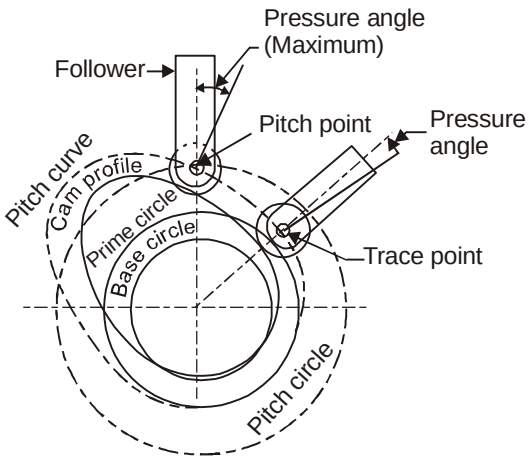

- **Base Circle** It is the smallest circle tangent to the cam profile (contour) drawn from the centre of rotation of a radial cam.
- **Trace point** It is a reference point on the follower to trace the cam profile such as the knife-edge of a knife-edged follower and centre of the roller of a roller follower.
- **Pitch Curve** It is the curve drawn by the trace point assuming that the cam is fixed, and the trace point of the follower rotates around the cam.
- **Pressure Angle:** The pressure angle, representing the steepness of the cam profile, is the angle between the normal to the pitch curve at a point and the direction of the follower motion. It varies in magnitude at all instants of the follower motion. A high value of the maximum pressure angle is not desired as it might jam the follower in the bearings.
- **Pitch Point:** It is the point on the pitch curve at which the pressure angle is maximum.
- **Pitch Circle:** It is the circle passing through the pitch point and concentric with the base circle.
- **Prime Circle.** The smallest circle drawn tangent to the pitch curve is known as the prime circle.

63. Consider the following statements regarding acceleration analysis:

1. A graphical method to find the location of the centre of curvature of the locus of a point on a moving body, is known as Bobillier construction.
2. A graphical method by which inflection circle can be drawn without requiring the curvatures of the centrodes, is known as Hartmann construction.
3. Bobillier theorem states that the angle subtended by one of the rays with the centrode tangent is equal to negative of the angle subtended by the other ray with the collineation axis.

Which of the above statements is/are correct?

(a) 1 and 3 only (b) 3 only
(c) 2 only (d) 1, 2 and3

Sol: (b)

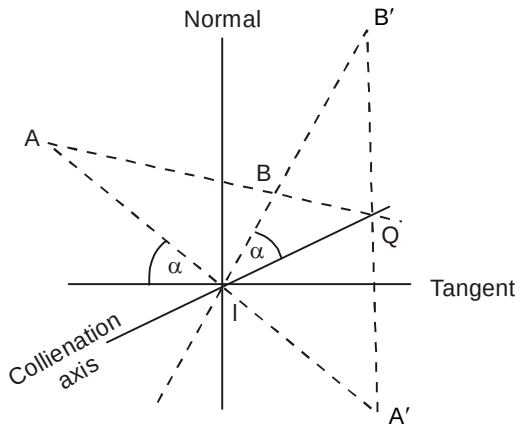

Bobillier Construction: This is another graphical method by which inflection circle can be drawn without requiring the curvatures of the centrodes.

Let A and B be two points on the moving body which are not collinear with I (figure). Let A' and B' be their conjugate points respectively at the instant Join AB and $A'B'$ and let their intersection be at Q. Then the line passing through I and Q is known as the collineation axis. This axis is specific for the two rays AA' and BB' and for another set of points A and B. Even on these rays, Q will have a different location and thus a different collineation axis.

Bobillier theorem. It states that the angle

IES MASTER .org

Institute for Engineers (IES/GATE/PSUs)

GATE 2021 TOPPER

CONGRATULATIONS

Your achievement has made us all proud

Consistency in results since **over a decade**

1 AIR (CE) Amit Sharma

2 AIR (CE) Abhishek Mishra

3 AIR (CE) Shashikant Kumar

4 AIR (CE) Ankit Gupta

5 AIR (CE) Prashant Dwivedi

6 AIR (CE) Tanmay Mahajan

7 AIR (CE) Amit

8 AIR (CE) Rahul Pati

8 AIR (CE) Pranshu Jangid

10 AIR (CE) Govind Prasad Bairwa

13 AIR (CE) Shashwat Srivastava

14 AIR (CE) Shubham Gupta

15 AIR (CE) Rajat Kr. Srivastava

18 AIR (CE) Ashish Singh Sengar

19 AIR (CE) Aman Gupta

19 AIR (CE) Hemant Kr. Tiwari

1 AIR (PI) Ganesh Kumar Adigaur

2 AIR (PI) Sh. Gowtham Gudimella

5 AIR (PI) Subhanshu Ranjan Tiwari

3 AIR (ME) Munish Kumar

14 AIR (ES) Amrendra Kumar Rai

20 AIR (EE) Krishna Meeraendra

and many more...

Scan to subscribe IES MASTER YouTube channel

Delhi Centre

F-126, Katwaria Sarai, New Delhi-110016

Call 80100 09955 Email info@iesmaster.org

Scan to download IES MASTER app

subtended by one of the rays (AA′ or BB′) with the centrode tangent is equal to negative of the angle subtended by the other ray with collineation axis.

Hartmann Construction: The Hartmann construction is a graphical method to find the location of the centre of curvature of the locus of a point on a moving body.

64. Consider the following parameters:

s = length of the shortest link,

l = length of the longest link,

p = length of one of the intermediate length links,

q = length of the other intermediate length links.

According to the Grashof's criteria, if s + *l* > p + q, then the category of four-bar mechanism is

(a) Double crank (b) Crank-rocker

(c) Change point (d) Triple rocker

Sol: (*)

	Shortest bar	Type
$\ell + s < p + q$	Frame	Double-crank
$\ell + s < p + q$	Side	Rocker-crank
$\ell + s < p + q$	Coupler	Double-rocker
$\ell + s = p + q$	Any	Change point
$\ell + s > p + q$	Any	Double-rocker

65. A uniform disc of 150 mm diameter has mass of 5 kg. It is mounted centrally in bearings which maintain its axle in a horizontal plane. The disc spins about its axle with a constant speed of 1000 rpm, while the axle processes uniformly about the vertical at 60 rpm. The gyroscopic couple acting on the disc is approximately.

(a) 6.5 Nm (b) 7.2 Nm

(c) 8.5 Nm (d) 9.2 Nm

Sol: (d)

d = 150 mm, r = 0.075 m

m = 5kg, N = 1000 rpm, N_P = 60 rpm

$$I = \frac{mr^2}{2} = \frac{5 \times (0.075)^2}{2} = 0.014 \text{ kg.m}^2$$

Gyroscopic couple,

$$C = I\omega\omega_p$$

$$= 0.014 \times \left(\frac{2\pi \times 1000}{60}\right) \times \left(\frac{2\pi \times 60}{60}\right)$$

= 9.2 N.m

66. A system of rotating masses is in dynamic balance when

(a) there does not exist any resultant centrifugal force only

(b) there does not exist any resultant couple only

(c) there does not exist any resultant centrifugal force as well as resultant couple

(d) there exists both resultant centrifugal force and resultant cuple

Sol: (c)

Dynamic Balancing: When several masses rotate in different planes, the centrifugal forces, in addition to being out of balance, also from couples. A system of rotating masses is in dynamic balance when there does not exist any resultant centrifugal force as well as resultant couple.

67. Wear rating of a long shoe drum brake is

(a) directly proportional to friction power

(b) directly proportional to brake shoe area

(c) inversely proportional to friction torque on drum

(d) inversely proportional to friction power

Sol: (b)

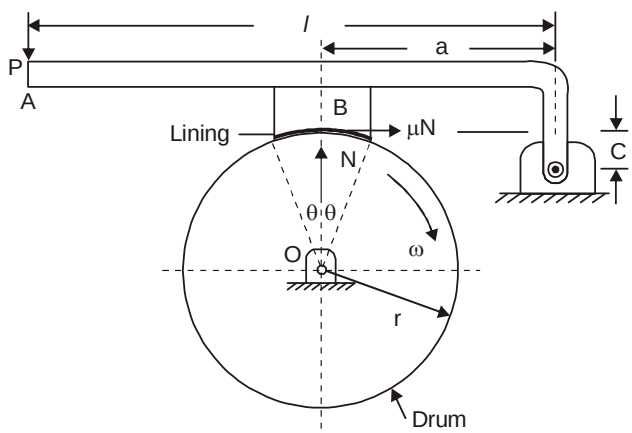

Normal reaction force = P × b × projected length

P = pressure

b = breadth of lining

friction force $\mu N = \mu Pb \times$ projected length

68. What is the required basic dynamic load rating, C, for a ball bearing to carry a radial load of 550 kg from a shaft rotating at 500 rpm that is part of an assembly conveyor in a manufacturing plant? (Take the design life as 1×10^9 rev)

(a) 5000 kg (b) 5500 kg

(c) 4000 kg (d) 4500 kg

Sol: (b)

Data given

$$W = 550 \text{ kg}$$
$$L = 10^9 \text{ rev}$$
$$n = 550 \text{ rpm}$$
$$C = ?$$
$$k = 3 \text{ for ball bearing}$$

$$L = \left(\frac{C}{W}\right)^k \times 10^6$$

$$10^9 = \left(\frac{C}{550}\right)^3 \times 10^6$$

$$10^3 = \left(\frac{C}{550}\right)^3$$

$$10 = \frac{C}{550}$$

or $$C = 5500 \text{ kg}$$

69. A catalog lists the basic dynamic load rating for a ball bearing to be 8000 kg for a rated life of 1×10^6 reve. What is the expected L_{10} life of the bearing if its is subjected to a load of 4000 kg?

(Take k = 3 for ball bearing)

(a) 8×10^6 rev (b) 6×10^6 rev

(c) 4×10^6 rev (d) 2×10^6 rev

Sol: (a)

$$L_{10} = \left(\frac{C}{W}\right)^n \times 10^6$$

where

L_{10} = basic life rating

C = dynamic load - carrying capacity = 8000kg for 1×10^6 rev

W = equivalent dynamic load = 4000 kg

n = 3 for ball bearing

$$L_{10} = \left(\frac{8000}{4000}\right)^3 \times 10^6$$

$$= 8 \times 10^6 \text{ rev}$$

70. Which one of the following static loading failure theories is used for ductile materials?

(a) Maximum shear stress theory

(b) Maximum normal stress theory

(c) Coulomb-motor theory

(d) Modified mohr theory

Sol: (a)

Ductile material isotropic materials are limited by their shear strength. Brittle materials are limited by their tensile strength. Maximum shear stress theory is more conservative than maximum distortion energy theory. Maximum shear stress (MSS) theory predicts failure when maximum shear stress is 0.5 of yield strength while maximum distortion theory (MDE) consider it as 0.57 of yield strength.

So, maximum stress theory is used for failure theory of ductile material under static loading.

Maximum normal stress (MNS) theory states that material will fail when largest magnitude principal stress exceeds either tensile or compressive strength. For ductile material we consider yield strength. It consider factor of safety as 1. while MSS consider 1.5 & MDE consider factor of safety 0.58 so, MNS is unsuitable for ductile material.

71. In shaft rigidity and dynamic considerations, shorter shaft lenghts

(a) increase deflections and reduce critical speeds

(b) increase deflections and raise critical speeds

(c) reduce deflection and reduce critical speeds

(d) reduce deflections and raise critical speeds

Sol: (d)

Critical speed of shaft $\omega_n = \sqrt{\frac{k}{m}} = \sqrt{\frac{g}{\delta}}$ ...(i)

Deflection in shaft is given by

$$\delta = \frac{PL^3}{48EI} \quad ...(ii)$$

From equation (i) & (ii)

If $L\downarrow \omega_n \uparrow$ & $\delta\downarrow$

72. Wear performance of the brakes can be improved to

(a) keep the pressure between the friction material and the material of the disc or drum as high as practical

(b) specify friction materials that have low bonding strength between constituent particles

(c) specify friction materials that have relatively high adhesion when in contact with the disc or drum material

(d) provide high hardness on the surface of the disc or drum by heat treatment

Sol: (a)

There are four ways to improve brake torque :

(i) Increase disc radius

(ii) Increase caliper picton area : ↑ the size of piston (or number of pistons) means we have more area applying specific pressure. If pressure remains constant and the area increases, the force applied will ↑.

(iii) Line pressure

(iv) Friction coefficient between pad and rotor : By selecting right material of pad material wear performance can be increase.

73. Consider the following statements regarding the parameters involved in the rating of clutches and brakes:

1. Torque required to accelerate or decelerate the system.
2. Time required to accomplish the speed change.
3. The cycling rate is required.

Which of the above statements is/are correct?

(a) 2 only (b) 1 and 2 only

(c) 2 and 3 only (d) 1, 2 and 3

Sol: (d)

Important factors consider for rating/selecting the brake or clutch are torque, response time, cyclic requirements and thermal capacity.

74. In the design of spur gear, the load distribution factor can beminimized by specifying which of the following?

1. Accurate teeth
2. Narrow fce widths
3. Long shaft spans between bearings

Select the correct answer using the code given below:

(a) 1 and 2 only (b) 1 and 3 only

(c) 2 and 3 only (d) 1, 2 and 3

Sol: (a)

Load distribution factor is based on many variables in the design of the gear themselves as well as in the shaft, bearing. Load distribution factor (K_m) can be minimize by specifying the following:

- Accurate teeth (a high quality number)
- Narrow face width
- Gear centered between bearing (straddle mounting)
- Shoft shaft span between bearings.
- Large shaft diameter (high stiffness)
- Rigid stiff housing
- High precision and small clearance on all drive components.

75. Which one of the following fatigue failure criterias is used in graphical method equation?

(a) Soderberg fatigue failure criteria

(b) Goodman fatigue failure criteria

(c) Smith diagram fatigue failure criteria

(d) Gerber fatigue failure criteria

Sol: (b)

Goodman line is widely used as the criterion of fatigue failure because of following reasons :

(i) Goodman line is safe from design consideration because it is completely inside the failure point test data.

(ii) The equation of straight line is simple compared with equation of parabolic curve.

(iii) It is not necessary to construct scale diagram and rough sketch is enough to construct fatigue diagram.

76. Solar thermal water pumps work on

(a) Rankine cycle (b) Otto cycle

(c) Carnot cycle (d) Diesel cycle

Sol: (a)

Solar thermal water pump works on Rankine cycle.

A schematic diagram of a typical Rankine cycle, solar thermal water pump is shown in figure. A solar-collector system may consist of flat plate - collectors, non-focusing type (stationary) collectors or sun-tracking concentrators. Water is used as a heat-transport fluid, and yields its heat to a low-boiling point organic working fluid (such as Freon R113, R12, isobutane etc.) in a heat exchanger. Surplus heat is stored in the thermal storage to be used later when the sun is not available. The high-pressure vapours of the working fluid expand in the turbine, condense in the condenser and return in the heat exchanger (boiler). A part of the irrigation-pumped water is diverted through the condenser for cooling purposes.

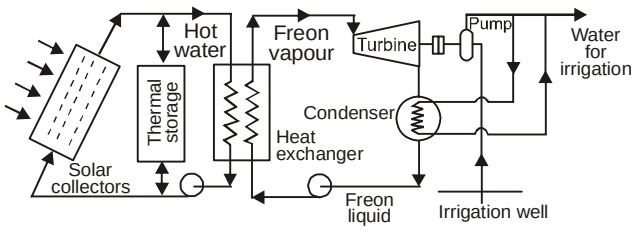

Figure: Solar thermal water pump

77. The concentration ratio of as high a value as 3000 can be obtained by

(a) modified flat plate collector

(b) compound parabolic concentrator

(c) cylindrical parabolic concentator

(d) central tower receiver

Sol: (d)

	Type of collector	Concentration Ratio
1.	Modified flat plate collector	4
2.	Compound parabolic concentrator	3 – 7
3.	Cylindrical parabolic concentrator	5 – 30
4.	Central tower receiver	3000

78. The angle between the sun's ray and its projection on a horizontal surface is known as

(a) Inclination angle (b) Zenith angle

(c) Solar aziumth angle (d) Hour angle

Sol: (a)

- **Inclined Angle (altitude),** (α) The angle between the sun's ray and its projection on a horizontal surface is known as the inclination angle.
- **Zenith Angle, (θ_z)** It is the angle between the sun's ray and the perpendicular (normal) to the horizontal plane.
- **Solar Azimuth Angle** (γ_s) It is the angle on a horizontal plane, between the line due south and the projection of the sun's ray on the horizontal plane. It is taken as +ve when measured from south towards west.

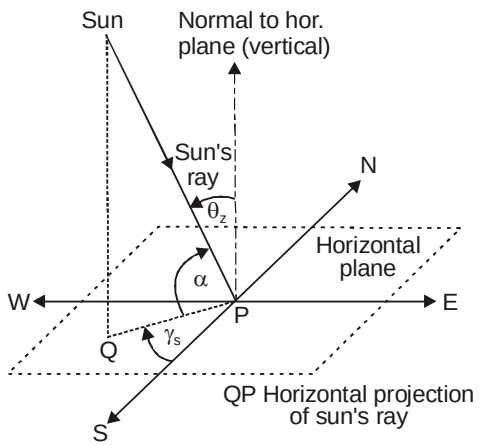

Figure: Solar altitude angle, solar azimuth angle and zenith angle

- **Slope (Tilt Angle), (β)** It is the angle between the inclined plane surface (collector), under consideration and the horizontal. It is taken to be positive for the surface sloping towards south.
- **Surface Azimuth Angle, (γ)** It is the angle in the horizontal plane, between the line due south and the horizontal projection of the normal to the inclined plane surface (collector). It is taken as +ive when measured from south towards west.
- **Hour Angle, (ω)** The hour angle at any moment is the angle through which the earth must turn to bring meridian of the observer directly in line with the sun's rays.

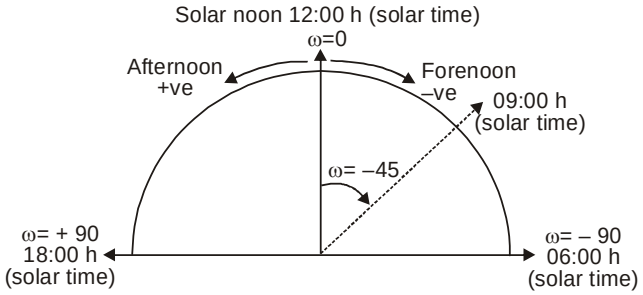

Figure: Hour angle

79. The total solar radiation received at any point on the earth's surface is the sum of the direct and diffuse radiation and is referred as

(a) Total diffuse radiation
(b) Insolation
(c) Total radiation
(d) Total specular radiation

Sol: (c)

On the surface of the earth, we have two components of solar radiation: (i) direct or beam radiation, unchanged in direction, and (ii) diffuse radiation, the direction of which is changed by scattering and reflection. The total radiation at any location on the surface of the earth is the sum of beam radiation and diffused radiation, and is known as global radiation. These terms may be properly defined as follows:

- Beam Radiation Solar radiation propagating in a straight line and received at the earth surface without change of direction, i.e., in line with the sun is called beam or direct radiation.
- Diffused Radiation Solar radiation scattered by aerosols, dust and molecules is known as diffused radiation. It does not have a unique direction.

80. The rate at which solar energy arrives at the top of the atmosphere is called

(a) Total energy (b) Radiation
(c) Solar constant (d) Radiation constant

Sol: (c)

The solar constant is defined as the energy received from the sun per unit time on a unit area of surface perpendicular to the direction of propagation of the radiation at the top of the atmosphere and at the earth's mean distance from the sun.

81. Consider the following statements regarding solar ponds:

1. It is possible to produce electricity from a solar pond by using a special 'High temperature' heat engine coupled to an electric generator.
2. In a large solar pond, the thermal capacitance and resitance can be made large enough to retain the heat in the bottom layer from summer to winter and the pond can therefore be used for heating buildings in the winter.
3. A solar pond is an ingenious collector, which uses water as its top cover.

Which of the above statements are correct?

(a) 1 and 2 only (b) 2 and 3 only
(c) 1 and 3 only (d) 1, 2 and 3

Sol: (b)

It is possible to produce electricity from a solar pond by using a special 'Low temperature' heat engine coupled to an electric generator.

82. Which one of the following is a vertical axis wind mill ?

(a) Darricus type wind mill

(b) Propellor type wind mill

(c) Sail type wind mill

(d) Multi blade type wind mill

Sol: (a)

Darrieus type wind mill

When the axis of rotation is parallel to air stream, the turbine is said to be a Horizontal Axis wind turbine, and when it is perpendicular to the air stream, it is said to be a Vertical Axis wind Turbine.

Types of Horizontal wind mill rotors:

(a) Single blade rotor

(b) Two blade rotor

(c) Three blade rotor

(d) Sailwing rotor

(d) Chalk multiblade rotor

(f) American multiblade rotor

(g) Dutch type rotor

Types of vertical wind mill rotors

(a) Cup type rotor

(b) Savonious rotor

(c) Darries rotor

(d) Musgrove rotor

(e) Erans rotor

83. Consider the following statements regarding solar radiation mesurement:

1. Pyranometer collimates the radiation to determine the beam intensity as a function of incident angle.
2. Pyranometer measures the total hemi-spherical solar radiation.
3. Pyrheliometer collimates the radiation to determine the beam intensity as a function of incident angle.

Which of the above statements is/are correct?

(a) 1 only (b) 2 and 3 only

(c) 1 and 2 only (d) 3 only

Sol: (b)

Two basic types of instruments are employed for solar radiation measurement.

1. A pyrheliometer, which collimates the radiation to determine the beam intensity as a function of incident angle.
2. A pyranometer, which measures the total hemispherical solar radiation. The pyranometer measurements are the most common.

84. Which one of the following materials is used for heat collection element in parabolic through plants of solar central receiver system ?

(a) Copper (b) Mild steel

(c) Stainless steel (d) Aluminum

Sol: (a)

The temperature gradient and effective stresses of the stainless steel and Sic conditions are significantly higher than the effective gradient and effective stresses of the aluminium and copper. The stainless steel condition has the highest stress failure ratio and copper has lowest stress failure ratio.

Directions:

Each of the next Six (06) items consists of two statements, one labelled as the 'Statement (I)' and the other as "Statement (II)'. You are to examine these two statements carefully and select the answers to these items using the codes given below:

Codes:

(a) Both Statement (I) and Statement (II) are individually true and Statement (II) is the correct explanation of Statement (I)

(b) Both Statement (I) and Statement (II) are individually true but Statement (II) is NOT the correct explanation of Statement (I)

(c) Statement (I) is true but Statement (II) is false

(d) Statement (I) is false but Statement (II) is true.

85. Statement (I): Centre of pressure is calculated by using the "Principle of Moments".

Statement (II): The moment of the resultant force about an axis is equal to the sum of moments of the components about the same axis.

Sol: (a)

Centre of pressure is calculated by using the

"Principle of Moments", which states that the moment of the resultant force about an axis is equal to the sum of moments of the components about the same axis.

86. Statement (I): Heat and work are boundary phenomenon and recognized only when they cross the boundary of a system.

Statement (II): Heat and work depend on the path followed by the system during a process.

Sol: **(b)**

- Both heat transfer and work transfer are boundary phenomena. Both are observed at the boundaries of the system, and both represent energy crossing the boundaries of the system.
- Heat transfer is the energy interaction due to temperature difference only. All other energy interactions may be termed as work transfer.
- Both heat and work are path functions and inexact differentials. The magnitude of heat transfer or work transfer depends upon the path the system follows during the change of state.

87. Statement (I): The vapour absorption system uses heat energy to change the condition of the refrigerant from the evaporator.

Statement (II): The load variations do not affect the performance of a Vapour absorption system.

Sol: **(d)**

- The load variation do not affect the performance of vapor absorption system. The load variations are met by controlling the quantity of aqua circulated and the quantity of steam supplied to generator.
- In vapor absorption cycle, ammonia is the refrigerant and water is absorbent. Ammonia vapor is vigorously absorbed in water. So, when low-pressure ammonia vapour from the evaporator comes in contact in the absorber with the weak solution (the concentration of ammonia in water is low) coming from the generator, it is readily absorbed, releasing the latent heat of condensation.

88. Statement (I): For moderate speed, the force of friction remains nearly constant and decrease slightly with increase of speed.

Statement (II): Friction is dependent on extent of area but independent on normal reaction.

Sol: **(c)**

Laws of Kinetic or Dynamic Friction

Following are the laws of kinetic or dynamic friction:

1. The force of friction always acts in a direction, opposite to that in which the body is moving.
2. The magnitude of the kinetic friction bears a constant ratio to the normal reaction between the two surfaces. But this ratio is slightly less than that in case of limiting friction.
3. For moderate speeds, the force of friction remains constant. But it decreases slightly with the increase of speed.

Laws of Solid Friction

Following are the laws of solid friction:

1. The force of friction is directly proportional to the normal load between the surfaces.
2. The force of friction is independent of the area of the contact surface for a given normal load.
3. The force of friction depends upon the material of which the contact surfaces are made.
4. The force of friction is independent of the velocity of sliding of one body relative to the other body.

89. Statement (I): The percent elongation is assumed to be based on a gage length of 2.00 in unless some other gage length is specifically indicated.

Statement (I): Theoretically, a material is considered ductile if its percent elongation is greater than 5% (lower values indicate brittleness).

Sol: **(b)**

Ductility may be expressed quantitatively as either percent elongation or percent reduction in area. The percent elongation % EL is the percentage of

IES MASTER

Institute for Engineers (IES/GATE/PSUs)

OUR STAR PERFORMERS - UPSC ESE 2020

"Consistent Quality, Outstanding Results"

CIVIL ENGINEERING

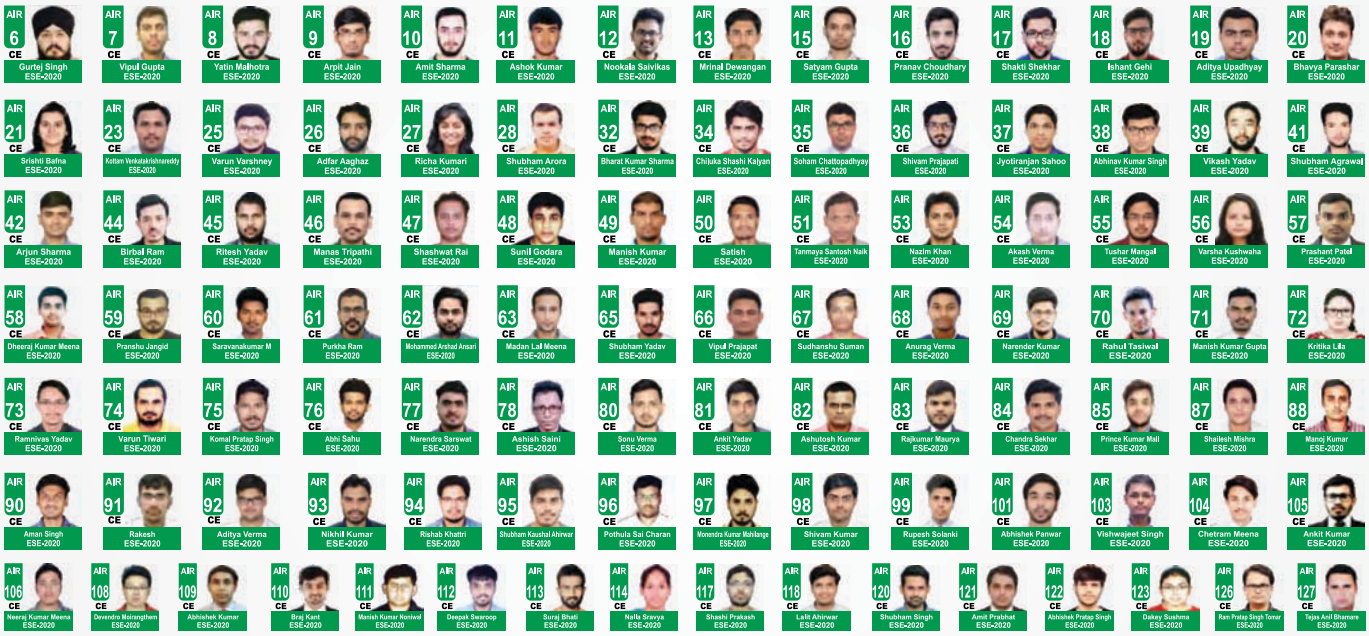

MECHANICAL ENGINEERING

ELECTRICAL ENGINEERING

ELECTRONICS & TELECOMMUNICATION ENGINEERING

plastic strain at fracture, or

$$\%EL = \left(\frac{l_f - l_0}{l_0}\right) \times 100$$

where l_f is the fracture and l_0 is the original gauge length as above. in as much as a significant proportion of the plastic deformation at fracture is confined to the neck region, the magnitude of % EL will depend on specimen gauge length. The shorter l_0 the greater is the fraction of total elongation from the neck and, consequently, the higher the value of % EL. Therefore, l_0 should be specified when percent elongation values are cited; it is commonly 50 mm or 2 inch.

Brittle materials are approximately considered to be those having a fracture strain of less than about 5%.

90. Mechanization means something is done or operated by machinery as well as by hand.

Statement (II): Mechanization of the manufacturing means milestone oriented trend towards minimizing the human efforts to the extent of its possibility, by adopting mechanical and electrical means or methods for automating the different manufacturing processes.

Sol: (d)

Mechanisation means operation or activity carried out or performed with the use of power (or energy) such as mechanical, electrical, pneumatic etc instead of being performed by a human being. However, the said break stop process is controlled and monitored completely by human being only.

91. Which one of the following statements is NOT correct regarding Rankine cycle ?

(a) For the steam boiler, the ideal process would be a reversible constant pressure heating process of water to form steam

(b) For the turbine, the ideal process would be a reversible adiabatic expansion of steam

(c) For the condenser, it would be a reversible constant pressure heat rejection as the steam condenses till it becomes saturated liquid

(d) For the pump, the ideal process would be the reversible adiabatic expansion of the liquid ending at the final pressure

Sol: (d)

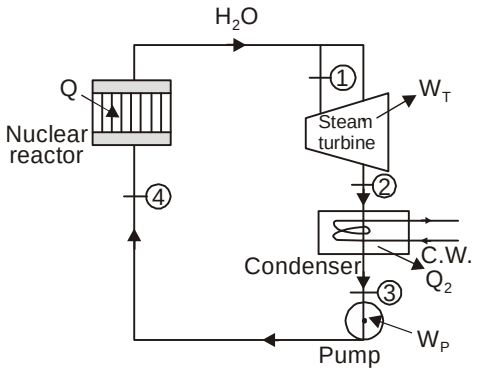

Fig. A simple nuclear power plant.

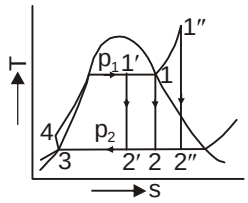

92. Which one of the following statements is NOT correct ?

(a) In surface condensers, the cooling water and exhaust steam do not come in direct contact with each other

(b) The vacuum efficiency is the ratio of ideal vacuum to actual vacuum

(c) The Hot well is a sump between the condenser and the boiler where the condensate coming from the condenser is collected

(d) Condenser is a closed vessel heat exchanger in which the steam coming from turbine is condensed using a supply of cooling water at atmospheric temperture

Sol: (b)

Vacuum efficiency is ratio of actual vacuum to the maximum obtainable vaccum.

93. Which one of the following statements is correct?

(a) Ultimate analysis is the determination of the percentages of fixed carbon, volatile matter, moisture and ash in fuel

(b) The percentage of each constituent element

in the fuel such as carbon, hydrogen, sulphur, oxygen, nitrogen, and ash, is determined by proximate analysis

(c) Calorific value of solid or liquid fuel is defined as the heat evolved by the complete combustion of unit mass of fuel

(d) Proximate analysis value of gaseous fuel is expressed as heat developed by the complete combustion of one cubic metre of gas at standard temperature and pressure

Sol: (c)

Calorific value of solid or liquid fuel is defined as the heat released by the complete combustion of unit mass of fuel.

94. Which one of the following statements is NOT correct

(a) A simple and convenient apparatus used for the volumetric analysis of dry flue gases is known as orsat apparatus

(b) The calorific values of liquid fuels are generally determined by using an orsat apparatus

(c) The calorific values of solid and liquid fuels are generally determined by using a bomb calorimeter

(d) In orsat apparatus, potassium hydroxide used as absorbent to absorb carbon dioxide

Sol: (b)

Calorific value of liquid fuels is determined by using specially designed calorimeters.

95. Which one of the following statements is NOT correct?

(a) Grate is the platform in the furnace of boiler upon which fuel is burnt and it is made of cast iron bars

(b) The removal of the mud and other impurities of water from the lowest part of the boiler is termed as blowing off

(c) Cochran boiler is one of the best types of vertical multi-tubular boiler.

(d) Babcock and Wilcox boiler is a fire tube boiler

Sol: (d)

Babcock and wilcox boiler is a water tube boiler.

96. Which one of the following statements is correct?

(a) In waer tube boiler, water surrounds the tubes and hot gases are inside the tubes

(b) The boilers which produce steam at pressures of 10 bar and below are called high pressure boiler

(c) Lancashire boilers are externally fired boiler

(d) Stirling boilers are externally fired boiler

Sol: (d)

Lancashire boilers are internally fired boiler.

The boilers which produce steam at pressures of 10 bar and below are called high pressure boiler.

When water is conained inside the tubes, which are surrounded by hot gases from outside, then the boilers are named as water tube boilers.

97. In a power plant, the efficiencies of the electric generator, turbine (mechanical), boiler, cycle and overall plant are 0.97, 0.95, 0.92, 0.42 and 0.33 respectively. What percentage of the total electricity generated is consumed in running the auxiliaries?

(a) 9.29% (b) 8.50%

(c) 7.32% (d) 6.76%

Sol: (c)

$$\eta_{plant} = \eta_{boiler} \times \eta_{turbine} \times \eta_{generator} \times \eta_{cycle} \times \eta_{auxiliaries}$$

$$\therefore \quad \eta_{auxiliaries} = \frac{0.33}{0.97 \times 0.95 \times 0.92 \times 0.42}$$

= 0.9268

Then

1 – 0.9268 = 0.0732

or 7.32% of total electricity generated is consumed by auxiliaries.

98. An ideal cycle is impracticable because

(a) There is an ideal fluid available which is considered as working fluid

(b) It is not possible to transfer heat of expanding steam to the fluid in the turbine itself

(c) It is always possible to transfer heat of

expanding steam to the fluid in the turbine itself

(d) There is no possibility of excessive humidity in low pressure stages of the turbine

Sol: (b)

- Reversible heat transfer cannot be obtained in finite time.
- Heat exchanger in the turbine is mechanically impracticable.
- The moisture content of the steam in the turbine will be high.

99. Match the following:

List-I (Boiler type)	List-II (Pressure (kg/cm^2))
A. La Mont Boiler	1. 84
B. Loeffler Boiler	2. 170
C. Benson Boiler	3. 135
D. Velox Boiler	4. 230

Select the correct matching using the code given below:

	A	B	C	D
(a)	2	1	3	4
(b)	1	2	4	3
(c)	2	3	4	1
(d)	3	2	1	4

Sol: (c)

100. What is the amount of air required to burn one kg of fuel and product of combustion for a fuel the percentage composition of which is given as C = 70%, H_2 = 30%

(a) 16.54 kg (b) 17.54 kg

(c) 18.54 kg (d) 19.54 kg

Sol: (c)

Fuel	Mass	O_2(kg)
C	0.7 kg	$0.7 \times \frac{8}{3} = 1.866$
H_2	0.3 kg	$0.3 \times 8 = 2.4$

Total O_2 = 4.266 kg

So, minimum mass of air required for complete combustion

$$= 4.266 \times \frac{100}{23}$$

= 18.54 kg

101. Which one of the following statements is correct?

(a) The Rankine cycle efficiency can be improved by increasing the average temperature at which heat is rejected

(b) The Rankine cycle efficiency can be improved by decreasing/reducing the temperature at which heat is rejected

(c) If the steam is superheated before allowing it to expand the Rankine cycle efficiency may be decreased

(d) The thermal efficiency of the Rankine cycle can be amply improved by increasing the condenser pressure

Sol: (b)

- Efficiency of Rankine cycle can be increased by a increasing the average temperature at which heat is supplied
- decreasing the with bullet temperature at which heat is rejected.

102. Match the following:

List-I

A. Boiler to Turbine process

B. Turbine to Condenser process

C. Condenser to Pump process

D. Pump to Boiler process

List-II

1. Reversible adiabatic expansion in the turbine
2. Constant pressure transfer of heat in the condenser
3. Reversible adiabatic pumping process in the feed pump
4. Constant pressure transfer of heat in the boiler

Select the correct matching using the code given below:

	A	B	C	D
(a)	3	4	1	2
(b)	4	3	2	1
(c)	2	1	4	3
(d)	1	2	3	4

Sol: (d)

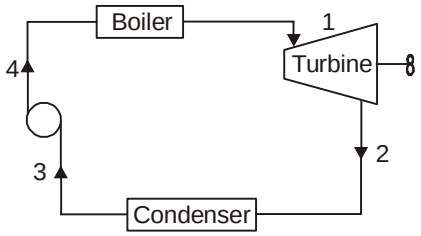

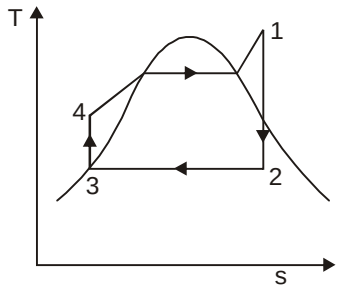

- Boiler to turbine process - Reversible adiabatic expansion in turbine
- Turbine to condenser process- constant pressure heat rejection in condenser
- condenser to pump process - Reversible adiabatic pumping in feed pump
- Pump to boiler process - consant pressure heat addition in boiler.

103. Which one of the following fuel cells has lowest operating temperature ?

(a) PEMFC (b) MCFC

(c) PAFC (d) SOFC

Sol: (a)

PEMFC

Fuel cell	Operating Temperature
1. PAFC	150 – 200°C
2. AFC	90°C
3. PEMFC	40 – 60°C
4. MCFC	600 – 700°C
5. SOFC	600 – 1000°C

104. Adjusting the nacelle about the vertical axis to bring the rotor facing wind is known as

(a) Pitch control (b) Hub control

(c) Rotor control (d) Yaw control

Sol: (d)

Yaw control is known as adjusting the nacelle about the vertical axis to bring the rotor facing the wind. The yaw control system continuously orients the rotor in the direction of wind.

105. In a distributed collector solar thermal electric power plant, the heat collected incollectors is used to dissociate ammonia into nitrogen and hydrogen at approximately.

(a) 300 atm pressure (b) 150 atm pressure

(c) 100 atm pressure (d) 40 atm pressure

Sol: (a)

In a distributed collector system, the solar thermal energy is collected from a large number of sun-tracking solar collectors, cylindrical parabolic trough type or paraboloidal dish type. Each collector transfers heat to heat-transport fluid. This heat - transport fluid available at high temperature from the collector is pooled at some central power station. The heat transfer fluid could be water/steam, to be used directly in a steam turbine, or it could be some thermochemical storage medium such as ammonia.

The heat collected in collectors is used to dissociate ammonia into nitrogen and hydrogen at high pressure (approx. 300 atm).

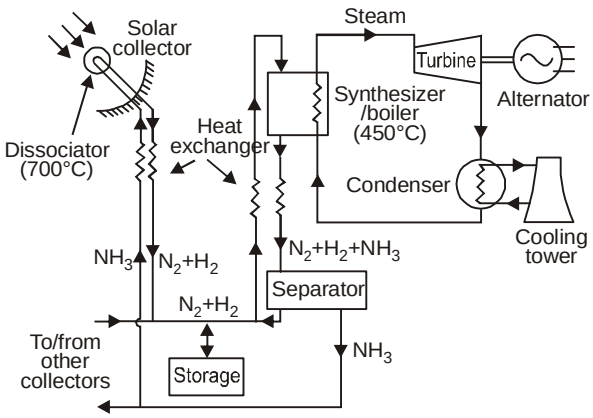

Figure: Distributed collector solar thermal electric-power plant

106. Lumped system analysis assumes a uniform temperature distribution throughout the body, which will be the case only when the thermal resistance of the body to heat conduction is

(a) 3 (b) 2

(c) 1 (d) 0

Sol: **(d)**

$$B_i = \frac{\text{Conduction resistance within the body}}{\text{Convection resistance at the surface of the body}}$$

Lumped system analysis assumes a uniform temperature distribution throughout the body, which is th case only when thermal resistance of the body to heat conduction (conduction resistance) is zero. Thus lumped analysis is exact when $B_i = 0$ and approximate when $B_i > 0$.

107. Which one of the following is NOT a fluid property for convection heat transfer coefficient ?

(a) Dynamic viscosity

(b) Thermal conductivity

(c) Density

(d) Rate of convection

Sol: **(d)**

Convection heat transfer coefficient (h) can be defined as the rate of heat transfer between a solid surface and fluid per unit surface area per unit temperature difference.

$$h = -\frac{K_{fluid}\,(\delta T/\delta y)_{y=0}}{T_s - T_\infty}$$

The convection heat transfer coefficient h is a function of following parameters:

(i) Fluid flow – laminar or turbulent, boundary layer configuration, etc.

(ii) Thermo-physical properties of the fluid – such as density viscosity , specific heat, coefficient of expansion and thermal conductivity.

(iii) Surface condition – roughness and cleanliness.

(iv) Geometry and orientation of the surface – plate, tube, etc., placed horizontally or vertically.

108. In friction coefficient, the boundary layer thickness (δ), the local friction coefficient (C_f) at location x and Reynolds number (R_c) at location x for turbulent flow over a flat plate are

(a) $\delta = \frac{5x}{Re_x^{0.5}}; C_f = \frac{0.664}{Re_x^{0.5}}$

(b) $\delta = \frac{0.382x}{Re_x^{0.5}}; C_f = \frac{0.0592}{Re_x^{0.5}}$

(c) $\delta = \frac{0.382x}{Re_x^{1/5}}; C_f = \frac{0.0592}{Re_x^{1/5}}$

(d) $\delta = \frac{5x}{Re_x^{1/5}}; C_f = \frac{0.664}{Re_x^{1/5}}$

Sol: **(c)**

For flat plate for turbulent flow

$$\frac{\delta}{x} = \frac{0.382}{(Re_x)^{1/5}}$$

$$C_f = \frac{0.0592}{(Re_x)^{1/5}}$$

For Laminar flow

$$\frac{\delta}{x} = \frac{4.91}{(Re_x)^{1/2}}$$

$$C_f = \frac{0.664}{(Re_x)^{1/2}}$$

109. The region from the tube inlet to the point at which the boundary layer merges at the centreline, is called

(a) Hydrodynamic entry length

(b) Thermal entrance region

(c) Hydrodynamic entrance region

(d) Thermal entry length

Sol: **(c)**

The region from the tube inlet to the point at which boundary layer merges at the centre line is called hydrodynamic entry region and the length of this region is called hydrodynamic entry length $(L_e)_h$.

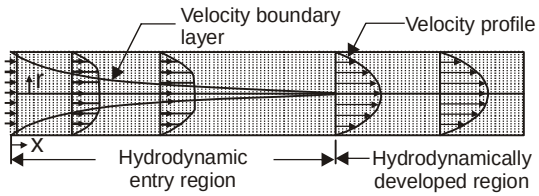

110. What is the traditional expression for calculation of heat transfer in fully developed turbulent flow in smooth tubes that recommended by Dittus Boelter ?

(a) $Nu_d = 0.023\left(Re_d^{0.8}\right)(Pr)^n$

(b) $Nu_d = 0.023\left(Re_d^{0.4}\right)(Pr)^{2n}$

(c) $Nu_d = 0.023\left(Re_d^{0.8}\right)(Pr)^{2n}$

(d) $Nu_d = 0.023\left(Re_d^{0.4}\right)(Pr)^n$

Sol: (a)

The phenomena of turbulent forced convection are so complex that empirical correlations are used in practice in engineering design.

(a) The Dittus–Boelter equation, given below, extends the Reynolds analogy to fluids with Prandtl numbers between 0.7 and 160 by multiplying the right hand side of Eq. Re = $0.023\,Re_d^{0.8}$ by a correction factor of the from Pr^n.

$$Nu_d = \frac{\bar{h}_c D}{k} = 0.023\,Re_d^{0.8}\,Pr^n$$

where n = 0.4 for heating ($T_w > T_b$) and n = 0.3 for cooling ($T_w < T_b$). It is valid within ± 20% for uniform wall temperature as well as uniform heat flux conditions within the following ranges of parameters:

$$6000 < Re_d < 10^7$$

$$0.5 < Pr < 120$$

$$L/D > 60$$

It should be used only for situations with moderate temperature differences ($T_w - T_b$), since variations in physical properties due to temperature gradient at a given cross-section are not taken into account by the correlation.

111. Which one of the following is having the highest value of fouling factor

(a) Sea water (b) Refrigerating liquid

(c) Fuel oil (d) Industrial air

Sol: (c)

	Fouling factor (m^2K/W)
Sea water	0.000172
Fuel oil	0.0009
Refrigerant liquid	0.0002
Industrial air	0.0004

112. The performance test of an air conditioning unit rated as 140.7 kW (40 TR) seems to be indicating poor cooling. The test on heat rejection to atmosphere in its condenser shows the following:

Cooling water flow rate - 4 L/s;

Water temperature - inlet 30°C and outlet 40°C;

Power input to motor - 48 kW (95% efficiency);

what is the actual refrigerating capacity of the unit ? (Take C_w = 4.1868)

(a) 34.7 TR (b) 45.6 TR

(c) 52.6 TR (d) 48.6 TR

Sol: (a)

Heat removed through circulating of water

$= \dot{m}C_P\Delta t$

$= 4 \times 4.1868 \times (40 - 30)$

$= 167.52$ kW

Power consumed in moter = 48 × 0.95 = 45.6kW

So, actual refrigeration effect

= 167.52 – 45.6

= 121.96 kW

So, Refrigeration capacity of unit

$$= \frac{121.96}{3.5} = 34.84 \text{ TR}$$

113. Which one of the following is the intensive property in thermodynamic system ?

(a) Pressure (b) Enthalpy

(c) Internal energy (d) Entropy

Sol: (a)

Pressure is an intensive property.

114. 100 kg of ice at –5°C is placed in a bunker to cool some vegetables. 24 hours later, the ice has melted into water at 10°C. What is the average rate of cooling in kJ/h provided by the ice ? (Take specific heat of ice is 1.94 kJ/kg.K; Specific heat of water is 4.1868 kJ/kg.K; latent heat of fusion of ice at 0°C is 335 kJ/kg)

(a) 1611 kJ/h (b) 1811 kJ/h

(c) 1711 kJ/h (d) 1911 kJ/h

Sol: (a)

Average rate of cooling in kJ/h provided by the ice = heat gained by 100 kg of ice at –5°C as it heats to water at 10°C in 24 hours

$$= \frac{100}{24}\left[1.94(0-(-5)\right]+335+\left[(10-0)\times 4.1868\right] \text{ kJ/m}$$

= 1611 kJ/hr

115. Which of the following principles and processes involved in the production of low temperatures are correct ?

1. Adiabatic demagnetization
2. Thermoelectric cooling
3. Reversible adiabatic expansion of a gas
4. Irreversible adiabatic expansion of a real gas

Select the correct answer using the code given below:

(a) 1 and 3 only (b) 1, 3 and 4 only

(c) 1, 2 and 3 only (d) 1, 2, 3 and 4

Sol: (d)

Adiabatic demagnetizat, Thermoelectric cooling, Reversible as well as irrevsible adiabatic expansion of a gas can produce low temperatures.

116. Which one of the following is used in aircraft refrigeration ?

(a) Vapor compression cycle refrigeration

(b) Gas cycle refrigeration

(c) Vapor absorption cycle refrigeration

(d) Steam ejector cycle refrigeration

Sol: (b)

Aircraft refrigeration systems work on gas cycle refrigeration.

117. An ammonia ice plant operates between a condenser temperature of 35°C and an evaporator temperature of –15°C. It produces 10 tons of ice per day from water at 30°C to ice at –5°C. Assume simple saturation cycle, what is the capacity of the refrigeration plant ? (Take Specific heat of ice is 1.94 kJ/kg.K; Specific heat of water is 4.1868 kJ/kg.K; latent heat of fusion of ice at 0°C is 335 kJ/kg)

(a) 54.43 kW (b) 64.32 kW

(c) 74.52 kW (d) 84.23 kW

Sol: (a)

Refrigeration capacity

heat removed from 10 tons of ice in 1 day (24 hours) as water at 30°C cools to ice at –5°C

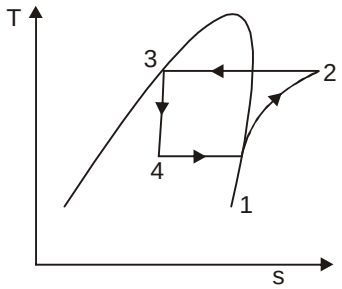

$$= \frac{10\times 1000}{24\times 60\times 60}\left[4.1868(30-0)+335+1.94(0-(-5))\right] \text{ kJ/sec}$$

= 54.43 kN

118. Consider the following statements in a vapor compression refrigeration system :

It is observed that an increase in condenser pressure, similarly results in

1. A decrease in the refrigerating capacity
2. An increase in power consumption
3. An increase in volumetric efficiency

Which of the above statements are correct?

(a) 1 and 3 only (b) 2 and 3 only

(c) 1 and 2 only (d) 1, 2 and 3

Sol: **(c)**

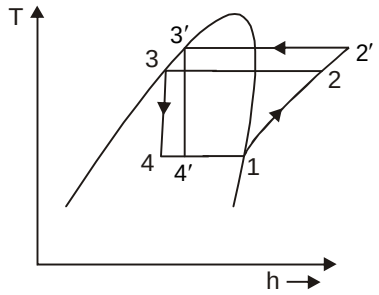

Increase in condenser pressure results in

- Increase in power consumption
- Decrease in refrigeration capacity
- Decrease in volumetric efficiency

119. Which one of the following is the designation for dichloro-tetrafluoro-ethane refrigerant used in refrigeration system ?

(a) R114 (b) R116

(c) R113 (d) R118

Sol: **(a)**

$C_2\ Cl_2\ F_4$

$C_m\ H_n\ F_P\ Cl_q$

m = 2, n = 0; P = 4; q = 2

R – (m – 1) (n + 1) P

R – (2 – 1) (0 + 1) 4

R – 114

120. Which of the following are highly explosive and flammable in a refrigeration system ?

1. Methane
2. Butane
3. R134a

Select the correct answer using the code given below:

(a) 2 and 3 only (b) 1 and 2 only

(c) 1 and 3 only (d) 1, 2 and 3

Sol: **(b)**

121. A body of dimensions 1.5 m × 1.0 m × 2 m, weighs 1962 N in water. What is the weight of the body in air ? (Take acceleration due to gravity as 9.81 m/s^2)

(a) 31392 N (b) 23392 N

(c) 14392 N (d) 46392 N

Sol: **(a)**

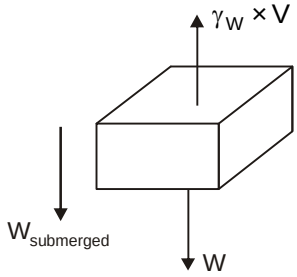

Here,

W = Weight of block in air

V = Volume of cuboid = (1.5×1×2) = 3 m^3

$W_{submerged}$ = 1962 N (given)

From vertical equilibrium,

$$W_{submerged} = W - \gamma_W \times V$$

$$\Rightarrow \quad 1962 = W - 9810 \times 3$$

$$\Rightarrow \quad W = (1962 + 9810 \times 3)$$

$$= 31392 \text{ N}$$

122. The following cases represent the two velocity components, v = 2y^2; w = 2xyz. What is the third component of velocity such that they satisfy the continuity equation ?

(a) –4xy – x^{2}y + f(y, z)

(b) –3xy – x^{3}y + f(y, z)

(c) –5xy – 2x^{2}y + f(y, z)

(d) –4xy – 3x^{2}y + f(y, z)

Sol: **(a)**

Given:

v = 2y^2, w = 2xyz,

To find: Value of u to satisfy the Continuity equation.

Continuity equation,

$$\frac{\partial u}{\partial x} + \frac{\partial v}{\partial y} + \frac{\partial w}{\partial z} = 0$$

$$\Rightarrow \frac{\partial u}{\partial x} + \frac{\partial (2y^2)}{\partial y} + \frac{\partial (2xyz)}{\partial z} = 0$$

$$\Rightarrow \frac{\partial u}{\partial x} = (-4y - 2xy)$$

$\Rightarrow \partial u = (-4y - 2xy)\, dx$

On integrating, we get

$$u = -4xy - 2\frac{x^2}{2} \times y + f(y, z)$$

$$\Rightarrow \boxed{u = -4xy - x^2y + f(y, z)}$$

123. An open circular tank of 20 cm diameter and 100 cm long contains water upto a height of 60 cm. The tank is rotated about its vertical axis at 300 rpm. What is the depth of parabola formed at the free surface of water ? (Take acceleration due to gravity as 9.81 m/s^2)

(a) 50.28 cm (b) 55.28 cm

(c) 65.36 cm (d) 69.36 cm

Sol: (a)

Given:

Diameter of cylinder (D) = 20 cm

$\therefore$ Radius (R) = $\frac{20}{2}$ = 10 cm = 0.1 m

Height of liquid (H) = 60 cm = 0.6 m

Speed (N) = 300 rpm

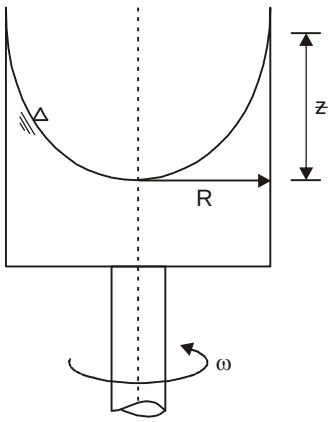

$\therefore$ Angular velocity (ω) = $\frac{2\pi N}{60} = \left(\frac{2\pi \times 300}{60}\right)$

$= 10\pi$ rad/sec

$\therefore$ Depth of parabola = $\frac{\omega^2 R^2}{2g}$

$= \frac{(10\pi)^2 \times (0.1)^2}{2 \times 9.81}$

= 0.50304 m

= 50.304 cm

124. What is the velocity of flow at radius of 0.8 m, if the water is flowing radially outward in a horizontal plane from a source at a strength of 12 m^2/s ?

(a) 9.55 m/s (b) 4.77 m/s

(c) 2.38 m/s (d) 5.62 m/s

Sol: (c)

Given:

Strength of source, q = 12 m^2/sec

The radial velocity (v_r) at any radius r (here, r = 0.8 m) is given by

$$v_r = \left(\frac{q}{2\pi r}\right) = \left(\frac{12}{2\pi \times 0.8}\right) \text{m/sec}$$

= 2.387 m/sec

125. A pitot-static tube is used to measure the velocity of water in a pipe. The stagnation pressure head is 6 m and static pressure head is 5m. what is the velocity of flow assuming the coefficient of tube equal to 0.98 ? (Take acceleration due to gravity as 9.81 m/s^2)

(a) 1.24 m/s (b) 2.68 m/s

(c) 3.56 m/s (d) 4.34 m/s

Sol: (d)

Here,

Velocity of flow (v) = $C_v \times \sqrt{2g(h_{stagnation} - h_{static})}$

$= 0.98 \times \sqrt{2 \times 9.81 \times (6-5)}$

$= 0.98 \times \sqrt{2 \times 9.81 \times 1}$

= 4.34 m/sec

126. A fluid of viscosity 0.7 N/m^2 and specific gravity 1.3 is flowing through a circular pipe of diameter 100 mm. The maximum shear stress at the pipe wall is given as 196.2 N/m^2. What is the pressure gradient of the flow ?

(a) 7448 N/m^2 per m (b) –7848 N/m^2 per m

(c) –9848 N/m^2 per m (d) 9848 N/m^2 per m

Sol: (b)

Maximum shear stress (τ_0) is given by

$$\tau_0 = -\left(\frac{\partial p}{\partial x}\right)\times\left(\frac{R}{2}\right),$$

where, R = Radius of pipe = $\frac{100}{2}$

= 50 mm = 0.05 m

$$\Rightarrow \quad 196.2 = -\frac{\partial p}{\partial x}\times\left(\frac{0.05}{2}\right)$$

$$\Rightarrow \text{Pressure gradient} = \left(\frac{\partial p}{\partial x}\right)$$

$$= \left[-\frac{196.2\times 2}{0.05}\right]$$

$= -7848$ N/m^2 per m

127. An oil of viscosity 10 poise flows between two parallel fixed plates which are kept at a distance of 50 mm apart. What is the rate of flow of oil between the plates if the drop of pressure in a length of 1.2 m be 0.3 N/cm^2 and the width of the plate is 200 mm ?

(a) 6.2 litre/s (b) 3.2 litre/s

(c) 8.2 litre/s (d) 5.2 litre/s

Sol: (d)

Given:

μ = 10 poise = 1 N sec/m^2,

t = 50 mm = 0.05 m,

Δp = 0.3 N/cm^2 = 0.3 × 10^4 N/m^2,

L = 1.2 m

Width, B = 200 mm = 0.2 m

We know that, in case of laminar flow through parallel plate,

$$\Delta p = \frac{12\mu VL}{t^2}$$

$$\Rightarrow \quad 0.3\times 10^4 = \frac{12\times 1\times V\times 1.2}{(0.05)^2}$$

$$\Rightarrow \quad V = \frac{0.3\times 10^4\times(0.05)^2}{12\times 1.2}$$

= 0.521 m/sec

∴ Rate of flow,

Q = V × Area = V × (B × t)

= 0.521 × (0.2 × 0.05)

= 5.21 × 10^{-3} m^3/sec

= 5.21 lt/sec

128. A shaft of diameter 0.35 m rotates at 200 rpm inside a sleeve 100 mm long. The dynamic viscosity of lubricating oil in the 2 mm gap between sleeve and shaft is 8 poises. What is the power lost in the bearing ?

(a) 0.59 kW (b) 0.69 kW

(c) 0.88 kW (d) 0.91 kW

Sol: (a)

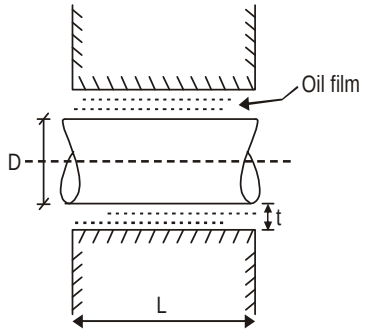

Given, dia. of shaft (D) = 0.35 m

Speed of shaft (N) = 200 rpm

Length of sleeve (L) = 100 mm = 0.10 m

Distance between sleeve and shaft, t

= 2mm = 2 × 10^{-3} m

Viscosity, μ = 8 poise = 0.8 Ns/m^2

∴ The power lost in the bearing is given by,

$$P = \frac{2\pi NT}{60} = \frac{2\pi N}{60}\times\left[\frac{\mu\pi^2 D^3 NL}{120t}\right]$$

$$= \frac{\mu\pi^3 D^3 N^2 L}{60\times 60\times t}\text{ watt}$$

$$= \left[\frac{0.8\times\pi^3\times(0.35)^3\times(200)^2\times 0.1}{60\times 60\times 2\times 10^{-3}}\right]\text{ watt}$$

= 590.842 W = 0.5908 kW

129. A sphere of diameter 2 mm falls 150 mm in 20 seconds in a viscous liquid. The density of the

sphere is 7500 kg/m^3 and of liquid is 900 kg/m^3. What is the coefficient of viscosity of the liquid ? (Take acceleration due to gravity as 9.81 m/s^2)

(a) 22.31 poise (b) 25.62 poise
(c) 19.17 poise (d) 32.21 poise

Sol: (c)

As per Stoke's law

Terminal Velocity $\left(\frac{L}{t}\right) = \frac{1}{18\mu}(\rho_s - \rho_f)d^2$

$$\Rightarrow \quad \mu = \frac{(\rho_S - \rho_f)gd^2}{19\times\left(\frac{L}{t}\right)}$$

$$= \frac{(7500-900)\times 9.81\times(2\times10^{-3})^2}{18\times\left(\frac{0.150}{20}\right)}$$

$$= 1.9184\frac{Ns}{m^2} = 19.184\,\text{Poise}$$

130. The resistance wire of a 1200 W hair dryer is 80 cm long and has a diameter of 0.3 cm. What is the rate of heat generation in the wire per unit volume ?

(a) 212 W/cm^3 (b) 312 W/cm^3
(c) 512 W/cm^3 (d) 412 W/cm^3

Sol: (a)

Given:

$\left.\begin{array}{l} d = 0.3\text{ cm} \\ \ell = 80\text{ cm}\end{array}\right]$ for wire as cylinder, $Q = 1200\,W$

Rate of heat generation in the wire per unit volume

$$= \frac{1200}{\frac{\pi}{4}(0.3)^2\times 80} = 212.2\text{ W/cm}^3$$

131. A 2-kW resistance W/m°C heater wire with thermal conductivity 15 W/m. °C, diameter 0.4 cm, and length 50 cm is used to boil the water by immersing it in water. Assuming the variation of the thermal conductivity of the wire with temperature to be negligible. What is the differential equation that describes the variation of the temperature in the wire during steady operation?

(a) $\frac{1}{r}\frac{d}{dr}\left(r\frac{dT}{dr}\right)+\frac{g}{k}=0$

(b) $\frac{1}{2r}\frac{dT}{dr}\left(r\frac{dT}{dr}\right)+\frac{g}{k}=0$

(c) $\frac{1}{r}\frac{d}{dr}\left(\frac{dT}{dr}\right)+\frac{g}{k}=0$

(d) $\frac{1}{r}\frac{d}{dr}\left(r\frac{dT}{dr}\right)=0$

Sol: (a)

This is the case of hollow cylinder with uniform heat generation.

The governing equation is

$$\frac{d^2T^2}{dr^2}+\frac{1}{r}\frac{dT}{dr}+\frac{g}{k}=0$$

or, $\boxed{\frac{1}{r}\frac{d}{dr}\left(\frac{r\,dT}{dr}\right)+\frac{g}{k}=0}$

132. An electric current is passed through a wire 1 mm in diameter and 10 cm long. The wire is submerged in liquid water at atmospheric pressure and the current is increased until the water boils. For this situation, h is 5000 W/m^2 °C. How much electric power must be supplied to the wire to maintain the wire surface at 114°C?

(a) 21.99 W (b) 32.39 W
(c) 42.39 W (d) 52.36 W

Sol: (a)

Data given:

d = 1 mm, Δt = 114 – 100 = 4°C

ℓ = 10 cm, h = 5000 W/m^2°C

$\dot{q}_{gen} = hA\Delta t$

or

$$\dot{q}_{gen} = 5000\times\pi\times1\times10^{-3}\times10\times10^{-2}(114-100)$$

= 21.99 W

133. A 2-kW resistance heater wire whose thermal conductivity is 15 W/m°C has a diameter of 4 mm and a length of 0.5 m, is used to boil the

water. If the outer surface temperature of resistance wire is 105°C, what is the temperature at the centre of the wire ?

(a) 136°C (b) 126°C

(c) 146°C (d) 156°C

Sol: **(b)**

Data given:

T_s = 105°C, k = 15 W/m°C

$$R = \frac{d}{2} = \frac{4}{2} = 2\,\text{mm}, \quad \ell = 0.5\ \text{mm}$$

The governing equation for electric wire carrying current is:

$$T = T_s + \frac{q_g R^2}{4k}\left[1 - \left(\frac{r}{R}\right)^2\right]$$

The maximum temperature occurs at centre of wire is given by

$$T_{max} = T_s + \frac{q_g R^2}{4k}$$

$$\text{As } q_g = \frac{q}{V} = \frac{2\times10^3}{\pi d \ell}$$

$$= \frac{2\times10^3}{\pi\times4\times10^{-3}\times0.5}$$

$= 318.30 \times 10^3$ W/m^3

$$\text{So, } T_{max} = \frac{105 + 318.30\times10^3\times(2\times10^{-3})^2}{4\times15}$$

= 105 + 21.2 = 126.2°C

134. The thermal contact conductance at the interface of two 1-cm-thick aluminum plates is measured to be 11,000 W/m^2°C. What is the thickness of the aluminum plate whose thermal resistance is equal to the thermal resistance of the interface between the plates? (Take the thermal conductivity of aluminum at room temperature as 237 W/m°C)

(a) 3.15 cm (b) 5.13 cm

(c) 1.28 cm (d) 2.15 cm

Sol: **(d)**

Data given:

h = 11000 W/m^{2}C

k = 237 W/m˚C

$$R_{convection} = \frac{1}{h} = \frac{1}{11000}$$

$= 0.909 \times 10^{-4}$ m^{2}k/W

$$R_{conduction} = \frac{L}{k} = \frac{L}{237}$$

According to question,

$R_{convection} = R_{conduction}$

or $0.909 \times 10^{-4} = \dfrac{L}{237}$

or $L = 237 \times 0.909 \times 10^{-4}$

= 0.0215 m = 2.15 cm

135. In the design of a fin, the error involved in one dimensional fin analysis is negligible (less than about 1%) when

(a) $\frac{h\delta}{k} < 0.2$ (b) $\frac{hk}{\delta} < 0.2$

(c) $\frac{h\delta}{k} < 2$ (d) $\frac{hk}{\delta} < 2$

Sol: **(a)**

The use of fin is recommended only when Bi equal to or less than 0.2. Over and above, the increas ein heat dissipation rate with increase in length is much less as compared to the rate of increase in heat dissipation rate with decrease in Biot number, Bi.

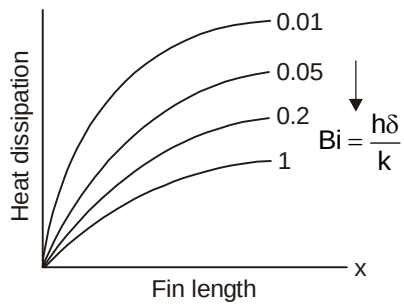

Note: The error from approximate solution will be less than 8%.

When

$$\left(\frac{h\delta}{k}\right)^{1/2} = \frac{h}{2}$$

136. A hydrocarbon refrigerator operating on equal proportions of propane and isobutane by mass works on simple saturation cycle. The condenser and evaporator pressure are 14 bar and 1.4 bar. What is the approximate theoretical COP of the system ? (Take properties: h_1 = 545 kJ/kg; h_3 = 341.15 kJ/kg = h_4, S_1 = 2.47 kJ/kgK = S_2; h_2 = 661 kJ/kg and T_2 = 63°C)

(a) 1.8 (b) 5.4

(c) 3.6 (d) 2.7

Sol: (a)

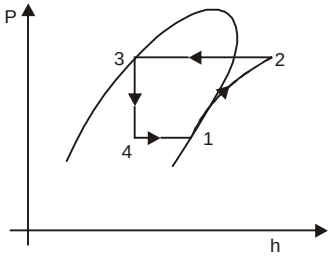

$$\text{COP} = \frac{\text{Refrigeration effect}}{\text{Work input}}$$

$$= \frac{h_1 - h_4}{h_2 - h_1} = \frac{545 - 341.15}{661 - 545}$$

$$= 1.80$$

137. The use of a single refrigerant in a simple vapor compression cycle for the production of low temperatures is limited by which of the following reasons ?

1. Solidification temperature of the refrigerant
2. Extremely low pressures in the evaporator and large suction volumes if a high-boiling refrigerant is selected
3. Very high-pressure ratio, therefore a low coefficient of performance

Select the correct answer using the code given below

(a) 1 and 2 only (b) 2 and 3 only

(c) 1 and 3 only (d) 1, 2 and 3

Sol: (d)

Use of a singe refrigerant in a simple vapour compression cycle for the production of low temperatures is limited by.

- solidification temperature of refrigerant
- Extremely low pressures in evaporator and large suction volumes if a high boiling refrigerant is select.
- Very high pressure ratio therefore low COP.

138. A capillary tube in a one-ton R22 air conditioner has a bore of 2.3 mm. Saturated liquid from the condenser enters at a temperature of 48°C and flows adiabatically through the tube until its temperature is 5°C. The friction factor is given as f = $0.32/Re^{0.25}$. What is the length of the capillary tube ? (Take intermediate sections at 40°C, 30°C, 20°C and 10°C and the mass flow rate of the refrigerant as 0.02417 kg/s)

(a) 13.41 $kg.s^{-1}.m^{-1}$ (b) 16.42 $kg.s^{-1}.m^{-1}$

(c) 19.42 $kg.s^{-1}.m^{-1}$ (d) 22.46 $kg.s^{-1}.m^{-1}$

Sol: (a)

From the simple saturation cycle, the mass flow rate is

$$\dot{m} = 0.02417 \text{ kg/s}$$

The cross-sectional area of the capillary tube is

$$A = \frac{\pi}{4}(0.0023)^2 = 4.15 \times 10^{-6} \text{ m}^2$$

$$\text{Let } G = \frac{\dot{m}}{A} = \frac{0.02417}{4.15 \times 10^{-6}}$$

$$= 5.83 \times 10^3 \text{ kgs}^{-1}\text{m}^{-2}$$

$$= \frac{u}{v}$$

$$Y = \frac{G}{2D} = \frac{8.53 \times 10^3}{2(0.0023)} = 1.2674 \times 10^6 \text{ kgs}^{-1}\text{m}^{-3}$$

$$Z = DG = (0.0023)(5.83 \times 10^3)$$

$$= 13.41 \text{ kgs}^{-1} \text{ m}^{-1}$$

139. the work required for compressing one kg of air is minimum if the compression is carried out

(a) Adiabatically (b) Isothermally

(c) Isentropically (d) Isochorically

Sol: (b)

Work required in compression is minimum if the compression is carried out isothermally.

140. Consider the following statements regarding torque converter:

1. A torque converter is a modified form of fluid coupling
2. A reciprocating pump is used in a torque converter.

Which of the above statements is/are correct?

(a) 1 only (b) 2 only
(c) Both 1 and 2 (d) Neither 1 nor 2

Sol: (a)

A torque converter is a type of fluid coupling that transfer power from a prime mover, like an internal combustion engine to a rotating driven load.

141. A one fourth scale model of a pump was tested in a laboratory at 1000 rpm. The head developed and power input at the best efficiency point were found to be 7 m and 25 kW respectively. What is the spedd of the prototype if the prototype pump has to operate against a head of 36 m ?

(a) 467 rpm (b) 567 rpm
(c) 667 rpm (d) 767 rpm

Sol: (b)

Scale ratio; $\frac{D_m}{D_P} = \frac{1}{4}$

$N_m = 1000$ rpm

$H_m = 7\,m;\ (P_{input})_m = 25\text{ kW}, H_P = 36\,m, N_P = ?$

$$\left(\frac{H}{D^2N^2}\right) = \text{Constant}$$

$$\left(\frac{H}{D^2N^2}\right)_m = \left(\frac{H}{D^2N^2}\right)_P$$

$$\Rightarrow \frac{H_m}{D_m^2N_m^2} = \frac{H_P}{D_P^2N_P^2}$$

$$\Rightarrow \left(\frac{N_P}{N_m}\right)^2 = \left(\frac{D_m}{D_P}\right)^2 \times \frac{H_P}{H_m}$$

$$= \left(\frac{1}{4}\right)^2 \times \frac{36}{7}$$

$$\Rightarrow \left(\frac{N_P}{N_m}\right)^2 = \frac{36}{112} \Rightarrow N_P = \sqrt{\frac{36}{112}} \times 1000$$

$$= 567 \text{ rpm}$$

142. Consider the following statements regarding Euler turbine equation:

1. The axial component produces a bending of the shaft which is taken by the journal bearings.
2. The axial force only can cause the rotation of the runner and produce work.
3. The tangential force only can cause the rotation of the runner and produce work
4. The radial component produces a bending of the shaft which is taken by the journal bearings.

Which of the above statements are correct?

(a) 1 and 2 only (b) 1 and 3 only
(c) 3 and 4 only (d) 2 and 4 only

Sol: (c)

Tangential force, only, can cause the rotation of runner and produce work.

The radial component produces a bending of the shaft which is taken by journal bearings.

143. Which one of the following turbines is the most popularly used one in the medium head range of 60 m – 300 m ?

(a) Kaplan turbine (b) Francis turbine
(c) Pelton turbine (d) Deriaz turbine

Sol: (b)

Most commonly used turbine in head range of 60m - 300 m is francis turbine.

144. Match the following:

List-I (Turbine types)

A. Deriaz turbine B. Propeller turbine
C. Francis turbine D. Pelton turbine

List-II (Flow directions)

1. Mixed flow 2. Tangential flow
3. Axial flow 4. Diagonal flow

	A	B	C	D
(a)	4	3	1	2
(b)	3	4	2	1
(c)	2	1	4	3
(d)	1	2	3	4

Sol: (a)

- Deriaz turbine - Diagonal flow
- Propeller turbine - Axial flow
- Francis turbine - Mixed flow
- Pelton turbine - Tangential flow

145. A Kaplan turbine plant develops 2000 kW under a head of 8 m while running at 100 rpm. the discharge is 250 m^3/s. The tip diameter of the runner is 6.5 m and the hub to tip ratio is 0.43. What is the flow ratio based on tip speed ? (Take acceleration due to gravity as 9.81 m/s^2)

(a) 0.43 (b) 0.58
(c) 0.62 (d) 0.73

Sol: (d)

Power output (P) = 2000 kW

H = 8 m

N = 100 rpm, Q = 250 m^3/s

$$\frac{D_h}{D_0} = 0.43$$

Tip diameter (D_0) = 6.5 m

Flow ratio $(\psi) = ?$

$$Q = \frac{\pi}{4}\left(D_0^2 - D_h^2\right) \times V_{fi}$$

$$250 = \frac{\pi}{4} D_0^2 \left[1 - \left(\frac{Dh}{D_0}\right)^2\right] \times V_{fi}$$

$$\Rightarrow \quad 250 = \frac{\pi}{4} \times (6.5)^2 \left[1 - (0.43)^2\right] \times V_{fi}$$

$$\Rightarrow \quad V_{fi} = 9.247 \text{ m/s}$$

$$\psi = \frac{V_{f1}}{\sqrt{2gH}} = \frac{9.247}{\sqrt{2 \times 4.81 \times 8}} = 0.73$$

146. The water in a jet-propelled boat is drawn amid-ship and discharged at the back with an absolute velocity of 15 m/s. the boat speed is 30 km/hr. The cross-sectional area of the jet at the back is 0.03 m^2. What is the efficiency of the jet propulsion ?

(a) 68.5% (b) 51.3%
(c) 45.9% (d) 39.4%

Sol: (c)

$$\eta = \frac{2Vu}{(V+u)^2} = \frac{2 \times \frac{25}{8} \times 15}{\left(\frac{25}{3} + 15\right)^2} = 459\%$$

147. Surge is a condition which occurs

(a) in forward movement of aircraft
(b) beyond the stable limit of operation
(c) in forward motion of aircraft with speed above sonic velocity
(d) due to the blast of air produced in a compressor

Sol: (a)

Surge is a condition which occurs in forward movement of aircraft.

148. Consider the following statements regarding stalling in axial compressor :

1. The flow separation occurring on the suction side of the blade is called negative stalling.
2. The flow separation occurring on the pressure side of the blade is called positive stalling.
3. The rotating stall decreases the effectiveness of the compressor.
4. The delivery pressure significantly drops with large stalling leading to flow reversal.

Which of the above statements are correct?

(a) 1 and 2 only (b) 2 and 3 only
(c) 3 and 4 only (d) 1 and 4 only

Sol: (c)

Flow seperation occurring on suction side of blades is positive stalling whereas flow separation on pressure side of blades is negative stalling.

149. In a double acting pump, the work saved by fitting air vessels is about

(a) 19.2 % (b) 29.2 %

(c) 39.2% (d) 50.2%

Sol: (c)

In a double acting pump, the work saved by fitting air vessels is about 39.2%.

150. A single acting reciprocating pump has a bore of 200 mm and a stroke of 350 mm and runs at 45 rpm. The suction head is 8 m and the delivery head is 20 m. What is the theoretical discharge of water if slip is 12% ? (Take acceleration due to gravity as 9.81 m/s^2)

(a) 7.260 ℓ/s (b) 6.956 ℓ/s

(c) 3.456 ℓ/s (d) 4.586 ℓ/s

Sol: (a)

Single acting reciprocating pump

D = 200 mm; L = 350 mm; N = 45 rpm

$$Q_{th} = \frac{ALN}{60}$$

$$= \frac{\frac{\pi}{4}(0.20)^2 \times 0.35 \times 45}{60} \times 1000$$

= 8.24 litre/sec.

$$\% \text{ slip} = \frac{Q_{th} - Q_{out}}{Q_{th}} \times 100$$

$$\Rightarrow \quad 12 = \frac{8.24 - Q_{out}}{8.24} \times 100$$

$$\Rightarrow \quad Q_{out} = 7.260 \text{ litre/sec}$$